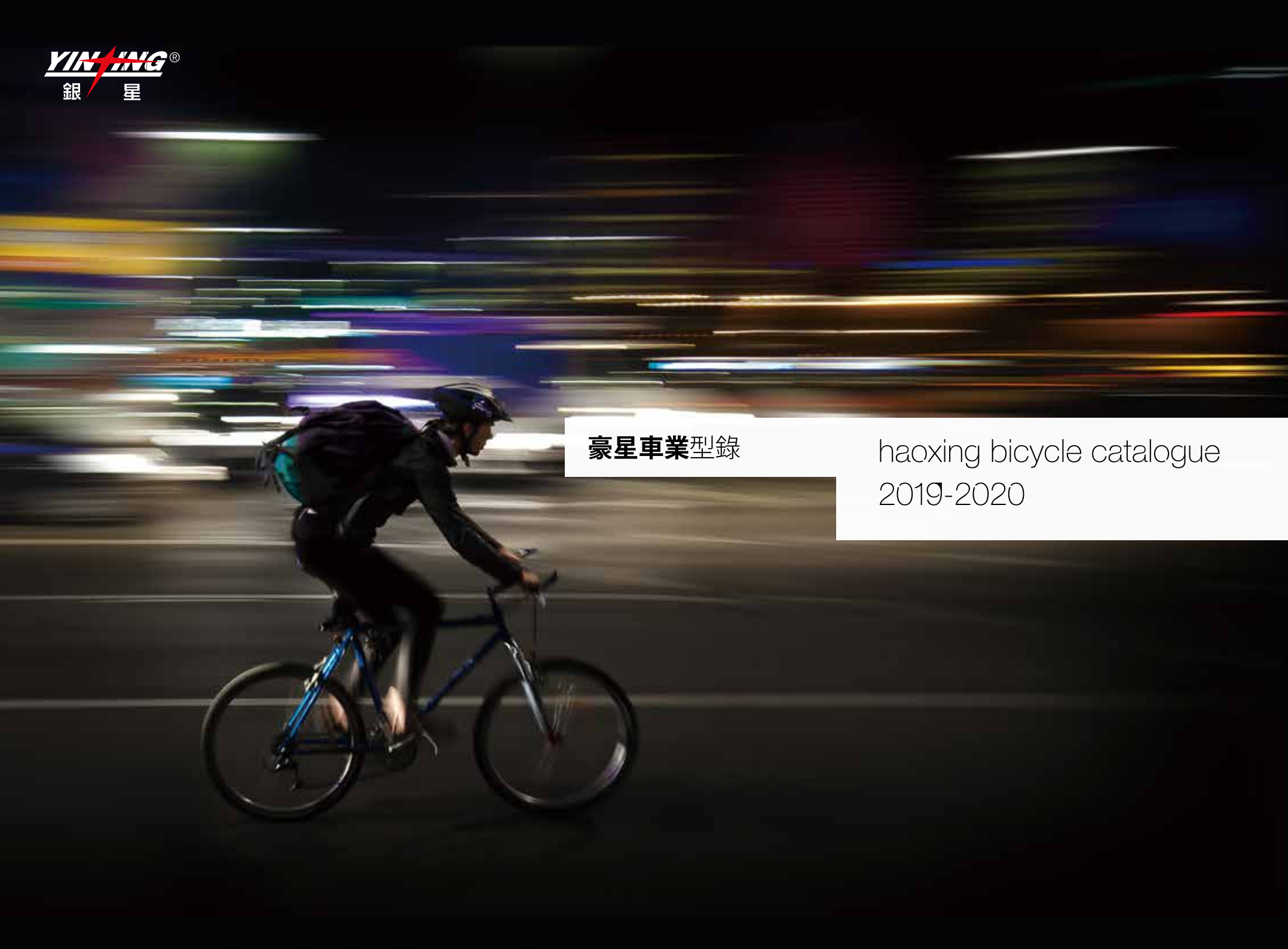

YIN HING®
銀 星

豪星車業型錄

haoxing bicycle catalogue 2019-2020

宁波豪亿车业有限公司（慈溪市银星车料厂）创建于九十年代，是自行车刹车器，及各类附件的专业制造商。公司凭借先进的管理手段严格实施、执行ISO9000质量管理体系标准，产品通过欧盟EN14766和EN14764认证。公司以「造型美观、性能优良可靠、价格合理、诚信服务」的宗旨深受广大中外客商的一致好评，是国内外各大整车厂的配套供应商。公司拥有企业自主出口经营权，产品主要销往欧洲、中东、东南亚、南美等十几个国家和地区。公司以高质量、低价格的经营方针，以互利互惠的经营原则，不断地完善自我和提升自我。为了满足市场和客户需求，扩展了轻合金领域，大力开发、制造轻合金新品。为自行车行业提供最优良的自行车零部件是我们豪亿人最终追求的目标。公司总经理徐柏银诚邀国内外广大客商前来洽谈、指导。

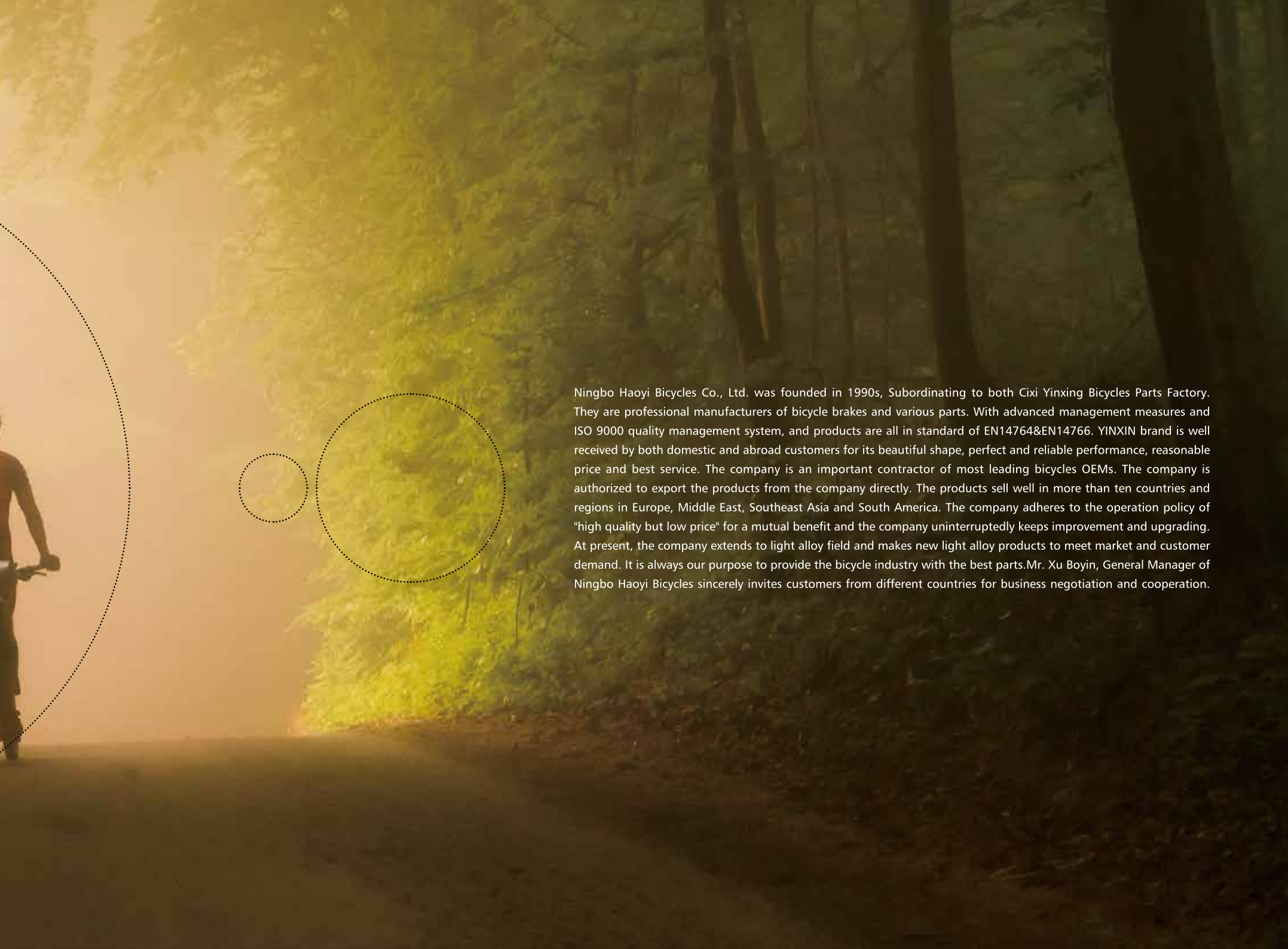

Ningbo Haoyi Bicycles Co., Ltd. was founded in 1990s, Subordinating to both Cixi Yinxing Bicycles Parts Factory. They are professional manufacturers of bicycle brakes and various parts. With advanced management measures and ISO 9000 quality management system, and products are all in standard of EN14764&EN14766. YINXIN brand is well received by both domestic and abroad customers for its beautiful shape, perfect and reliable performance, reasonable price and best service. The company is an important contractor of most leading bicycles OEMs. The company is authorized to export the products from the company directly. The products sell well in more than ten countries and regions in Europe, Middle East, Southeast Asia and South America. The company adheres to the operation policy of "high quality but low price" for a mutual benefit and the company uninterruptedly keeps improvement and upgrading. At present, the company extends to light alloy field and makes new light alloy products to meet market and customer demand. It is always our purpose to provide the bicycle industry with the best parts.Mr. Xu Boyin, General Manager of Ningbo Haoyi Bicycles sincerely invites customers from different countries for business negotiation and cooperation.

index

06 液压碟刹HYDRAULIC DISC BRAKE
09 电动车E-BIKE COLLECTION
10 機械碟刹DISC BRAKE
12 碟盘ROTORS
13 维修工具/油管配件/转接器
REPAIR KIT/HOSE PARTS/ADAPTER INSRUCTION CHART
14 机械碟刹/刹把DISC BRAKE LEVER
15 机械碟刹花鼓HUB FOR DISC BRAKE
16 全铝刹把ALLOY V-BRAKE LEVER
25 半铝刹把HALF-ALLOY BRAKE LEVER
30 包塑刹把PLASTIC BRAKE LEVER
35 童车刹把FOR CHILDREN BRAKE LEVER
39 全铝V型闸ALLOY V-BRAKE
45 铁制V型闸STEEL V-BRAKE
48 包塑V型闸PLASTIC V-BRAKE
51 钳型闸/U型闸CALIPER BRAKE U-BRAKE
55 抱闸BAND BRAKE
56 其它配件 OTHERS

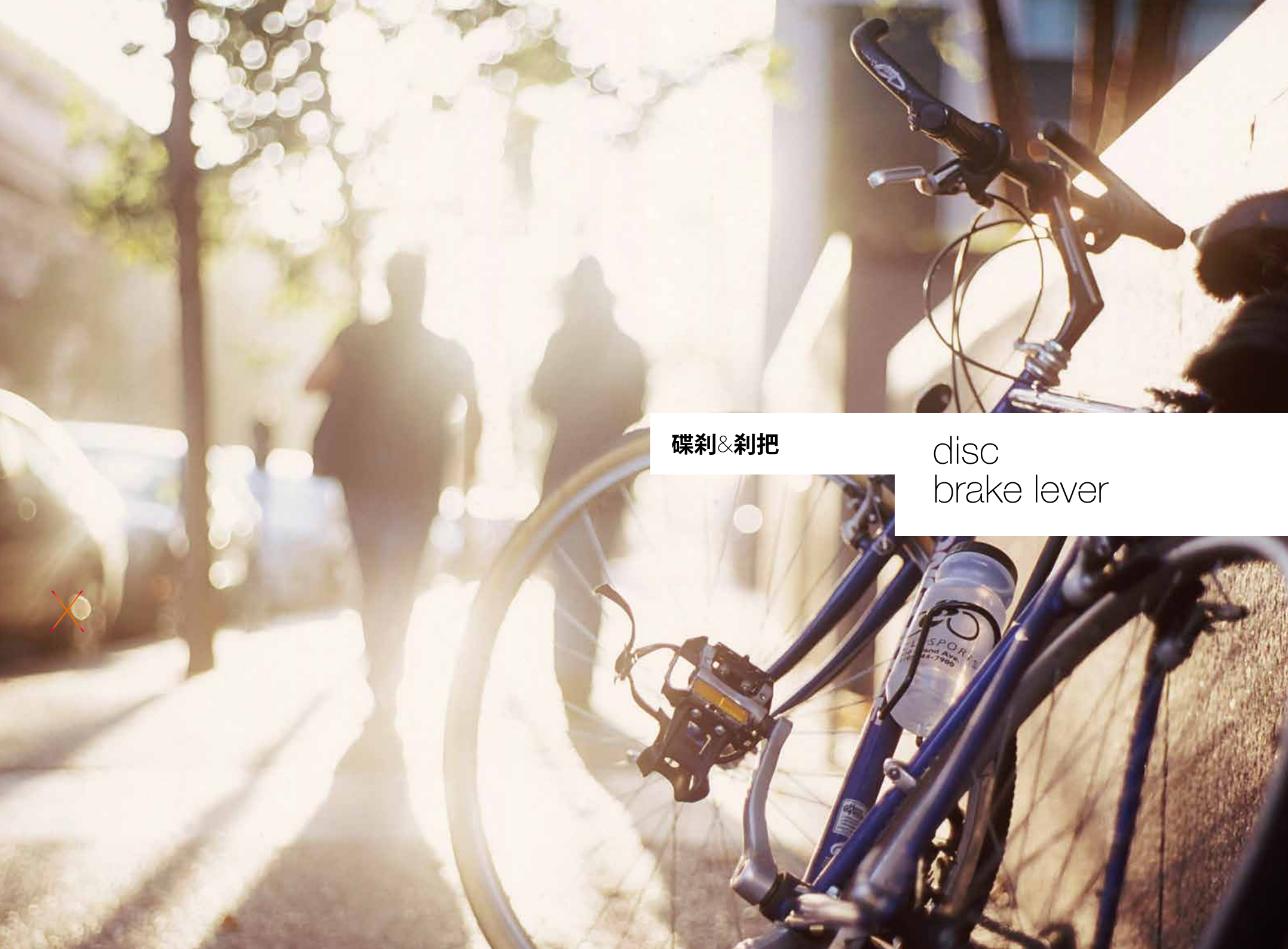

碟剎&剎把

disc brake lever

NEW

4 PISTON

2 PISTON

P12

P11

HD-M620

HD-M600

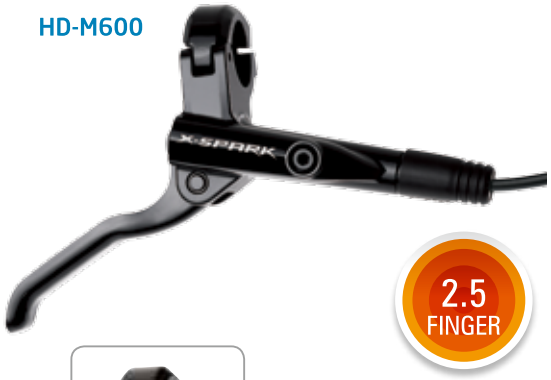

●SYSTEM
Open system,4Piston or 2Piston
High power and controllable braking
Easy installation,adjustment and maintenance

●CALIPER
Forged aluminum body
Automatic caliper positioning via front and rear adapters
Finish :Black

●WEIGHT
Front wheel:300 grams/wheel
Rear wheel:310 grams/wheel
(Excludes rotor,adapter& mounting bolts)

●ROTOR
Wave type:YRT-03-A
Diameter:Ø160mm
Weight:104 grams
Also available:Ø160mm

●LEVER
Cast aluminum lever$bracket
Two pieces hinged bracket
HD-M600 2FINGER
HD-M620 2.5FINGER
Finish:Black

●PADS
Easy replacement
Organic compound

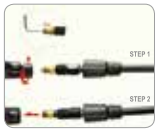

4 PISTON

2 PISTON

P12

P11

HD-M520

2 FINGER

HD-M500

3 FINGER

●SYSTEM
Open system,4Piston or 2Piston
High power and controllable braking
Easy installation,adjustment and maintenance

●CALIPER
Forged aluminum body
Automatic caliper positioning via front and rear adapters
Finish :Black

●WEIGHT
Front wheel:322 grams/wheel
Rear wheel:328grams/wheel
(Excludes rotor,adapter& mounting bolts)

●ROTOR
Wave type:YRT-05-A
Diameter:Ø160mm
Weight:125 grams

●LEVER
Cast aluminum lever$bracket
Two pieces hinged bracket
HD-M520 2FINGER
HD-M500 3FINGER
Finish:Black

●PADS
Easy replacement
Organic compound

4 PISTON　　2 PISTON

P12

P11

HD-M220

2 FINGER

HD-M200

2.5 FINGER

●SYSTEM
Open system,4Piston or 2Piston
High power and controllable braking
Easy installation,adjustment and maintenance

●CALIPER
Forged aluminum body
Automatic caliper positioning via front and rear adapters
Finish :Black

●WEIGHT
Front wheel:302 grams/wheel
Rear wheel:320 grams/wheel
(Excludes rotor,adapter& mounting bolts)

●ROTOR
Wave type:YRT-03-A
Diameter:Ø160mm
Weight:104 grams

●LEVER
Cast aluminum lever$bracket
Two pieces hinged bracket
HD-M220 2FINGER
HD-M200 2.5FINGER
Finish:Black

●PADS
Easy replacement
Organic compound

NEW

4 PISTON

2 PISTON

P12

P11

HD-E520

HD-E500

●SYSTEM
Open system,4Piston or 2Piston
High power and controllable braking
Sensor control designed
Easy installation,adjustment and maintenance

●CALIPER
Forged aluminum body
Automatic caliper positioning via front and rear adapters
Finish :Black

●WEIGHT
Front wheel:365 grams/wheel
Rear wheel:375grams/wheel
(Excludes rotor,adapter& mounting bolts)

●ROTOR
Wave type:YRT-05-A
Diameter:Ø160mm
Weight:125 grams

●LEVER
Cast aluminum lever$bracket
Two pieces hinged bracket
HD-E520 2FINGER
HD-E500 3FINGER
Finish:Black

●PADS
E-Bike Metal Sintered compound

E-DB06

●SYSTEM
Cable actuated mechanical disc brake Actuated

●CALIPER
Melt forged aluminum mechanical discbrake
Powder Metallurgy Technology
W/return Spring
Finish:Black

●ROTOR
Wave type:YRT-05-A
Diameter:Ø160mm
Weight:125grams

●WEIGHT
Front wheel:226grams/wheel
Rear wheel:230grams/wheel
(Excludes Rotor)

●PADS
E-Bike Metal Sintered compound

LL-E402DG

Mechanical switch designed
Melt forged aluminum bracket and lever
Return spring
Suitable for thumb shift and Twist shifter
4.0 finger lever
Standard finish:black or silver
Weight:125g/pc

YX-DB01

●SYSTEM
Cable actuated mechanical disc brake Actuated with linear pull brake levers

●CALIPER
Melt forged aluminum mechanical discbrake
Finish:Black

●ROTOR
Wave type:YRT-05-A
Diameter:Ø160mm
Weight:128grams

●WEIGHT
Front wheel:193grams/wheel
Rear wheel:198grams/wheel
(Excludes Rotor)

●PADS
Metal Sintered compound
Easy replacement
Also available:Organic compound

YX-DB02

●SYSTEM
Cable actuated mechanical disc brake Actuated with linear pull brake levers

●CALIPER
Melt forged aluminum mechanical discbrake
Finish:Black

●ROTOR
Wave type:YRT-01-A
Diameter:Ø160mm
Weight:130grams
Also available:Ø140mm/Ø180mm/Ø203mm

●WEIGHT
Front wheel:225grams/wheel
Rear wheel:230grams/wheel
(Excludes Rotor)

●PADS
Metal Sintered compound
Easy replacement
Also available:Organic compound

YX-DB03

Inner Floating Adjusted

●SYSTEM
Cable actuated mechanical disc brake Actuated with linear pull brake levers

●CALIPER
Melt forged aluminum mechanical discbrake
Inner Floating Adjusted
Finish:Black

●ROTOR
Wave type:YRT-01-A
Diameter:Ø160mm
Weight:130grams
Also available:Ø140mm/Ø180mm/Ø203mm

●WEIGHT
Front wheel:210grams/wheel
Rear wheel:228grams/wheel
(Excludes Rotor)

●PADS
Metal Sintered compound
Easy replacement
Also available:Organic compound

YX-DB06

●SYSTEM
Cable actuated mechanical disc brake Actuated with linear pull brake levers

●CALIPER
Melt forged aluminum mechanical discbrake
Finish:Black

●ROTOR
Wave type:YRT-05-A
Diameter:Ø160mm
Weight:125grams

●WEIGHT
Front wheel:225grams/wheel
Rear wheel:245grams/wheel
(Excludes Rotor)

●PADS
Metal Sintered compound
Easy replacement
Also available:Organic compound

YX-DB08

●SYSTEM
Cable actuated mechanical disc brake Actuated with linear pull brake levers

●CALIPER
Single-piece aluminum body
Powder Metallurgy Technology
Melt forged aluminum mechanical discbrake
Finish:Black

●ROTOR
Wave type:YRT-05-A
Diameter:Ø160mm
Weight:125grams

●WEIGHT
Front wheel:204grams/wheel
Rear wheel:203grams/wheel
(Excludes Rotor)

●PADS
Metal Sintered compound
Easy replacement
Also available:Organic compound

YX-DB08-10

●SYSTEM
Cable actuated mechanical disc brake Actuated with linear pull brake levers

●CALIPER
Single-piece aluminum body
Powder Metallurgy Technology
Melt forged aluminum mechanical discbrake
W/return Spring
Finish:black

●ROTOR
Wave type:YRT-05-A
Diameter:Ø160mm
Weight:125grams

●WEIGHT
Front wheel:204grams/wheel
Rear wheel:203grams/wheel
(Excludes Rotor)

●PADS
Metal Sintered compound
Easy replacement
Also available:Organic compound

NEW

YX-DB09

●SYSTEM
Cable actuated mechanical disc brake Actuated with linear pull brake levers

CALIPER
Melt forged aluminum mechanical discbrake
Powder Metallurgy Technology
W/return Spring
Finish:black

●ROTOR
Wave type:YRT-05-A
Diameter:Ø160mm
Weight:125grams

WEIGHT
Front wheel:226grams/wheel
Rear wheel:230grams/wheel
(Excludes Rotor)

●PADS
Metal Sintered compound
Easy replacement
Also available:Organic compound

NEW

YX-DB01-10

●SYSTEM
Cable actuated mechanical disc brake Actuated with linear pull brake levers

●CALIPER
Melt forged aluminum mechanical discbrake
Finish:Black

●ROTOR
Wave type:YRT-05-A
Diameter:Ø160mm
Weight:128grams

●WEIGHT
Front wheel:193grams/wheel
Rear wheel:198grams/wheel
(Excludes Rotor)

●PADS
Metal Sintered compound
Easy replacement
Also available:Organic compound

NEW

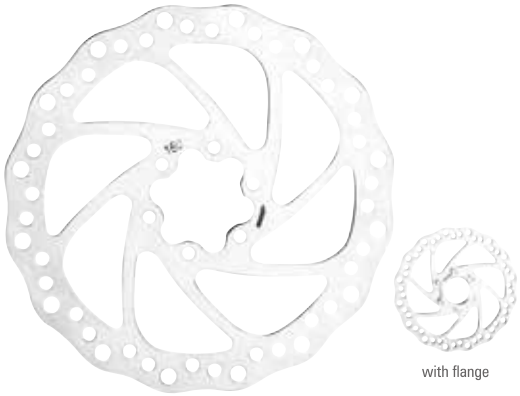

with flange

YRT-01

Popular wave
Stiffness,high heated finish
Thickness:2.0mm
Diameter:140mm,160mm,180mm,203mm
Weight:150grams

YRT-03

Hot escape
Stiffness,high heated finish
Thickness:2.0mm
Diameter:160mm
Weight:120grams

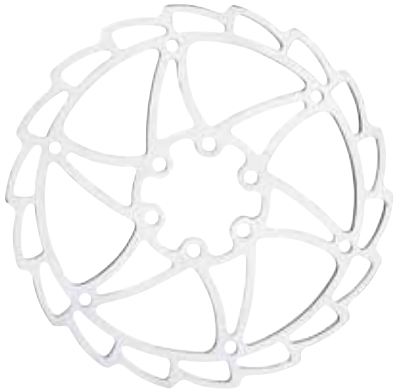

YRT-04

Smart wave
Stiffness,high heated finish
Thickness:2.0mm
Diameter:160mm
Weight:120grams

with flange

YRT-05

Popular wave
Stiffness,high heated finish
Thickness:2.0mm
Diameter:160mm
Weight:150grams

Repair Kit 维修工具盒

适用于 SHIMANO TEKTRO 豪星油碟 C.SPARK X.SPARK HERCULES 等

注射器	Syringe*2
塑胶管	Plastic tubing*2
挡块 1	Link Stopper 1
挡块 2	Link Stopper 2
入油接头带 O 型环	Plastic inserts with o-ring*3
矿物油 50ml	Mineral oil 50ml*1
T10 扳手	T10 Wrench*1
T15 扳手	T15 Wrench*1
M3 扳手	M3 Wrench*1
M2.5 扳手	M2 Wrench*1
8mm 开口扳手	Open end Wrench of 8mm*1

Hose /Hose Parts 油管及配件

- HD-M220/M200
- HD-M420/M400
- HD-M520/M500
- HD-E520/E500
- HD-M620/M600

Packing 包装

The sets packing in colour box
One set (fornt and rear)

Adapter Instruction Chart 碟刹卡钳主体转换座

NOTE:F:Standard front /R:Standard rear fork/PS:Post mount fork/None:available currently
备注 :"F" 标准前叉 ;"R" 标准后叉 ;"P.S" Post Mount 前叉 ;"-" 暂无适用

ROTOR SIZE 碟盘尺寸	F 标准前叉	R 标准后叉	P.S POST MOUNT 前叉
Ø140mm	M-3	M-4 M-7	-
Ø160mm	M-4 M-7	M-1 M-8	-
Ø180mm	M-1 M-8	M-5	M-2
Ø203mm	M-5	-	M-6

M-1 M-2 M-3 M-4 M-5 M-6 M-7 M-8

YX-B809

Die-casted alloy bracket and Lever for Dise-brake,or v Brake
2-3 finger compatible with thumb shifter
Packing: 100PRS/CTN 21/22kgs
Meas: 44 x 30 x 26 cm
铝合压铸蝶及握把可配V夹与碟刹夹器
指幅类型: 2-3相容thumb
包装: 100套/箱
毛重: 22千克 净重: 21千克
材积: 44 x 30 x 26 cm

YX-B808

Die-casted alloy bracket and Lever Dise-brake,or v Brake
2-3 finger compatible with thumb shifter
Packing: 100PRS/CTN 19/20kgs
Meas: 44 x 30 x 26 cm
铝合压铸蝶及握把可配V夹与碟刹夹器
指幅类型: 2-3相容thumb
包装: 100套/箱
毛重: 18.6千克; 净重: 17.6千克
材积: 44 x 30 x 26 cm

YX-B808C

YX-B810

Die-casted alloy bracket and Lever Dise-brake,or v Brake
2-3 finger compatible with thumb shifter
Packing: 100PRS/CTN 19/20kgs
Meas: 44 x 30 x 26 cm
铝合压铸蝶及握把可配V夹与碟刹夹器
指幅类型: 2-3相容thumb
包装: 100套/箱
毛重: 18.6千克; 净重: 17.6千克
材积: 44 x 30 x 26 cm

YX-B810C

Pads for Disc Brake 機械碟刹刹車片

P01 P02 P03 P04 P05/P09 P06/P10 P07 P08 P11 P12

YX-HB01
ALLOY HUBS
3/8 x 14G x 36H x 100 x 108
3/8 x 14G x 36H x 135 x 145

YX-HB02
ALLOY HUBS
3/8 x 14G x 36H x 100 x 108
3/8 x 14G x 36H x 135 x 145

YX-HB03
STEEL HUBS
3/8 x 14G x 36H x 100 x 140
3/8 x 14G x 36H x 100 x 175

YX-HB03
STEEL HUBS
3/8 x 14G x 36H x 100 x 140
3/8 x 14G x 36H x 100 x 175

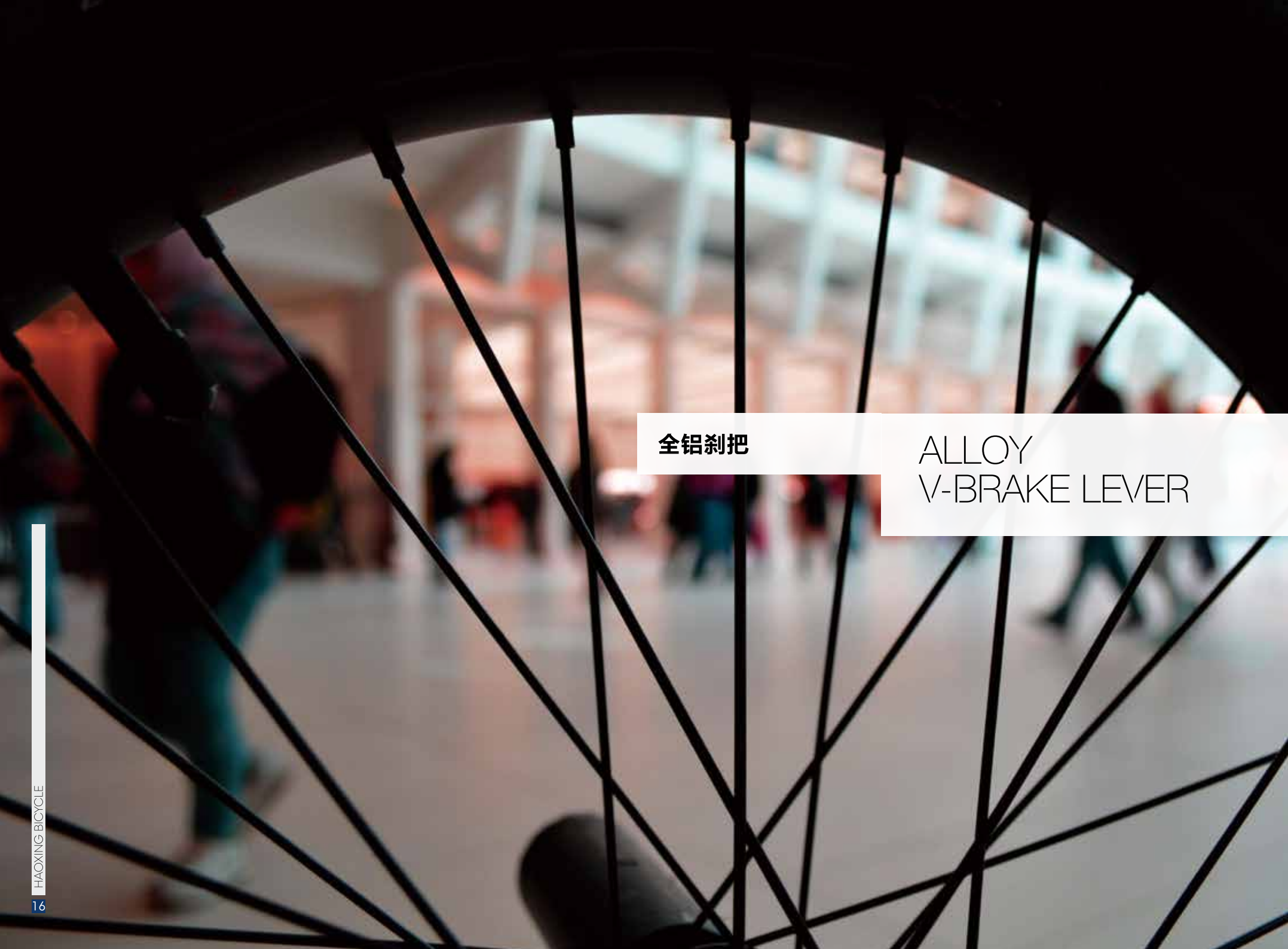

全铝刹把

ALLOY V-BRAKE LEVER

YX-B101

4 finger alloy lever & bracket Return spring
Packing: 50PRS/CTN
G.W./N.W.: 12/11kgs
Meas: 45 x 30 x 20 cm
4指式铝合金闸把、座架回位弹簧
包装: 50副/箱
毛重: 12千克 净重: 11千克
材积: 45 x 30 x 20 cm

YX-B102

4 finger alloy lever & bracket Return spring
Packing: 50PRS/CTN
G.W./N.W.: 12/11kgs
Meas: 45 x 30 x 20 cm
4指式铝合金闸把、座架回位弹簧
包装: 50副/箱
毛重: 12千克 净重: 11千克
材积: 45 x 30 x 20 cm

YX-B103

4 finger alloy lever & bracket Return spring
Packing: 50PRS/CTN
G.W./N.W.: 12/11kgs
Meas: 45 x 30 x 20 cm
4指式铝合金闸把、座架回位弹簧
包装: 50副/箱
毛重: 12千克 净重: 11千克
材积: 45 x 30 x 20 cm

YX-B117

4 finger alloy lever & bracket Return spring
Packing: 50PRS/CTN
G.W./N.W.: 12/11kgs
Meas: 45 x 30 x 20 cm
4指式铝合金闸把、座架回位弹簧
包装: 50副/箱
毛重: 12千克 净重: 11千克
材积: 45 x 30 x 20 cm

YX-B605A

3-4 finger alloy lever & bracket Return spring
Packing: 100PRS/CTN
G.W./N.W.: 19/18kgs
Meas: 46 x 32 x 26 cm
3-4指式铝合金闸把、座架回位弹簧
包装: 100副/箱
毛重: 19千克 净重: 18千克
材积: 46 x 32 x 26 cm

YX-B604

Melt forged alloy lever for racing bike
Packing: 100PRS/CTN 18/17kgs
Meas: 36 x 26 x 23 cm
压铸铝合金,公路赛车专用副闸把,
可配防护套
包装: 100套/箱
毛重: 18千克 净重: 17千克
材积: 36 x 26 x 23 cm

YX-B48A

4 finger alloy lever
Packing: 100PRS/CTN
G.W./N.W.: 19/18kgs
Meas: 46 x 34 x 27 cm
4指式铝合金闸把
座架回位弹簧
包装: 100副/箱
毛重: 19千克 净重: 18千克
材积: 46 x 34 x 27 cm

YX-B45A

4 finger alloy lever
Packing: 100PRS/CTN
G.W./N.W.: 19/18kgs
Meas: 46 x 34 x 27 cm
4指式铝合金闸把
座架回位弹簧
包装: 100副/箱
毛重: 19千克 净重: 18千克
材积: 46 x 34 x 27 cm

YX-B110

2-3 finger alloy lever & bracket Return spring
Packing: 100PRS/CTN
G.W./N.W.: 19/18kgs
Meas: 46 x 32 x 26 cm
2-3指式铝合金闸把、座架回位弹簧
包装: 100副/箱
毛重: 19千克 净重: 18千克
材积: 46 x 32 x 26 cm

YX-B49

4 finger alloy lever
Packing: 100PRS/CTN
G.W./N.W.: 19/18kgs
Meas: 46 x 34 x 27 cm
4指式铝合金闸把
座架回位弹簧
包装: 100副/箱
毛重: 19千克 净重: 18千克
材积: 46 x 34 x 27 cm

YX-B49C

YX-B111

2-3 finger alloy lever & bracket Return spring
Packing: 100PRS/CTN
G.W./N.W.: 17/16kgs
Meas: 44 x 30 x 26 cm
2-3指式铝合金闸把、座架回位弹簧
包装: 100副/箱
毛重: 17千克 净重: 16千克
材积: 44 x 30 x 26 cm

YX-B111PA

YX-B111P

YX-B112

2-3 finger alloy lever & bracket Return spring
Packing: 100PRS/CTN
G.W./N.W.: 19/18kgs
Meas: 46 x 32 x 26 cm
2-3指式铝合金闸把、座架回位弹簧
包装: 100副/箱
毛重: 19千克 净重: 18千克
材积: 46 x 32 x 26 cm

YX-B113

2-3 finger alloy lever & bracket Return spring
Packing: 100PRS/CTN
G.W./N.W.: 19/18kgs
Meas: 46 x 32 x 26 cm
2-3指式铝合金闸把、座架回位弹簧
包装: 100副/箱
毛重: 19千克 净重: 18千克
材积: 46 x 32 x 26 cm

YX-B104

3-4 finger alloy lever & bracket Return spring
Packing: 100PRS/CTN
G.W./N.W.: 19/18kgs
Meas: 46 x 32 x 26 cm
2-3指式铝合金闸把、座架回位弹簧
包装: 100副/箱
毛重: 19千克 净重: 18千克
材积: 46 x 32 x 26 cm

YX-B114

2-3 finger alloy lever & bracket Return spring
Packing: 100PRS/CTN
G.W./N.W.: 19/18kgs
Meas: 44 x 30 x 26 cm
2-3指式铝合金闸把、座架回位弹簧
包装: 100副/箱
毛重: 19千克 净重: 18千克
材积: 44 x 30 x 26 cm

YX-B238A

2-3 finger alloy lever & bracket Return spring
Packing: 100PRS/CTN
G.W./N.W.: 19/18kgs
Meas: 46 x 32 x 26 cm
2-3指式铝合金闸把、座架回位弹簧
包装: 100副/箱
毛重: 19千克 净重: 18千克
材积: 46 x 32 x 26 cm

YX-B108

4 finger alloy lever & bracket Return spring
Packing: 100PRS/CTN
G.W./N.W.: 19/18kgs
Meas: 46 x 34 x 27 cm
4指式铝合金闸把、座架回位弹簧
包装: 100副/箱
毛重: 19千克 净重: 18千克
材积: 46 x 34 x 27 cm

YX-B109

2-3 finger alloy lever & bracket Return spring
Packing: 100PRS/CTN
G.W./N.W.: 19/18kgs
Meas: 46 x 32 x 26 cm
2-3指式铝合金闸把、座架回位弹簧
包装: 100副/箱
毛重: 19千克 净重: 18千克
材积: 46 x 32 x 26 cm

YX-B105

2-3 finger alloy lever & bracket Return spring
Packing: 100PRS/CTN
G.W./N.W.: 19/18kgs
Meas: 46 x 32 x 26 cm
2-3指式铝合金闸把、座架回位弹簧
包装: 100副/箱
毛重: 19千克 净重: 18千克
材积: 46 x 32 x 26 cm

YX-B107

2-3 finger alloy lever & bracket Return spring
Packing: 100PRS/CTN
G.W./N.W.: 19/18kgs
Meas: 46 x 32 x 26 cm
2-3指式铝合金闸把、座架回位弹簧
包装: 100副/箱
毛重: 19千克 净重: 18千克
材积: 46 x 32 x 26 cm

YX-B229

2 -3 finger alloy lever & bracket Return spring
Packing: 100PRS/CTN
G.W./N.W.: 19/18kgs
Meas: 46 x 32 x 26 cm
2-3指式铝合金闸把、座架回位弹簧
包装: 100副/箱
毛重: 19千克 净重: 18千克
材积: 46 x 32 x 26 cm

YX-B239

3-4 finger alloy lever & bracket
Return spring
Packing: 100PRS/CTN
G.W./N.W.: 21/20kgs
Meas: 46 x 32 x 26 cm
3-4指式铝合金闸把、座架回位弹簧
包装: 100副/箱
毛重: 21千克 净重: 20千克
材积: 46 x 32 x 26 cm

YX-B501

3-4 finger light alloy lever &
bracket Return spring
Packing: 100PRS/CTN
G.W./N.W.: 18/17kgs
Meas: 46 x 32 x 26 cm
3-4指轻合金闸把、座架回位弹簧
包装: 100副/箱
毛重: 18千克 净重: 17千克
材积: 46 x 32 x 26 cm

YX-B501D

2-3 finger light alloy lever &
bracket Return spring
Packing: 100PRS/CTN
G.W./N.W.: 18/17kgs
Meas: 44 x 30 x 26 cm
2-3指轻合金闸把、座架回位弹簧
包装: 100副/箱
毛重: 18千克 净重: 17千克
材积: 44 x 30 x 26 cm

YX-B502

3-4 finger alloy lever & bracket
Return spring
Packing: 100PRS/CTN
G.W./N.W.: 19/18kgs
Meas: 46 x 32 x 26 cm
3-4指式铝合金闸把、座架回位弹簧
包装: 100副/箱
毛重: 19千克 净重: 18千克
材积: 46 x 32 x 26 cm

YX-B502D

2-3 finger alloy lever & bracket
Return spring
Packing: 100PRS/CTN
G.W./N.W.: 19/18kgs
Meas: 44 x 30 x 26 cm
2-3指式铝合金闸把、座架回位弹簧
包装: 100副/箱
毛重: 19千克 净重: 18千克
材积: 44 x 30 x 26 cm

YX-B801

2-3 finger alloy lever & bracket
Return spring
Packing: 100PRS/CTN
G.W./N.W.: 19/18kgs
Meas: 46 x 32 x 26 cm
2-3指式铝合金闸把、座架回位弹簧
包装: 100副/箱
毛重: 19千克 净重: 18千克
材积: 46 x 32 x 26 cm

YX-B106

2-3 finger alloy lever & bracket
Return spring
Packing: 100PRS/CTN
G.W./N.W.: 19/18kgs
Meas: 46 x 32 x 26 cm
2-3指式铝合金闸把、座架回位弹簧
包装: 100副/箱
毛重: 19千克 净重: 18千克
材积: 46 x 32 x 26 cm

YX-B601

2-3 finger alloy lever & bracket
Return spring
Packing: 100PRS/CTN
G.W./N.W.: 19/18kgs
Meas: 44 x 30 x 26 cm
2-3指式铝合金闸把、座架回位弹簧
包装: 100副/箱
毛重: 19千克 净重: 18千克
材积: 44 x 30 x 26 cm

YX-B701

2-3 finger alloy lever & bracket
Return spring
Packing: 100PRS/CTN
G.W./N.W.: 19/18kgs
Meas: 44 x 30 x 26 cm
2-3指式铝合金闸把、座架回位弹簧
包装: 100副/箱
毛重: 19千克 净重: 18千克
材积: 44 x 30 x 26 cm

YX-B229B

3-4 finger alloy lever & bracket
Return spring
Packing: 100PRS/CTN
G.W./N.W.: 20/19kgs
Meas: 46 x 32 x 26 cm
3-4指式铝合金闸把、座架回位弹簧
包装: 100副/箱
毛重: 20千克 净重: 19千克
材积: 46 x 32 x 26 cm

YX-B503

2-3 finger alloy lever & bracket
Return spring
Packing: 100PRS/CTN
G.W./N.W.: 19/18kgs
Meas: 44 x 30 x 26 cm
2-3指式铝合金闸把、座架回位弹簧
包装: 100副/箱
毛重: 19千克 净重: 18千克
材积: 44 x 30 x 26 cm

YX-B504

2-3 finger alloy lever & bracket
Return spring
Packing: 100PRS/CTN
G.W./N.W.: 20/19kgs
Meas: 44 x 30 x 26 cm
2-3指式铝合金闸把、座架回位弹簧
包装: 100副/箱
毛重: 20千克 净重: 19千克
材积: 44 x 30 x 26 cm

YX-B121

2 finger alloy lever & bracket
Return spring
Packing: 100PRS/CTN
G.W./N.W.: 16/15kgs
Meas: 40 x 28 x 23 cm
2指式铝合金闸把、座架回位弹簧
包装: 100副/箱
毛重: 16千克 净重: 15千克
材积: 40 x 28 x 23 cm

YX-B122

YX-B225

2-3 finger alloy lever & bracket
Return spring
Packing: 100PRS/CTN
G.W./N.W.: 16/15kgs
Meas: 42 x 30 x 26 cm
2-3指式铝合金闸把、座架回位弹簧
包装: 100副/箱
毛重: 16千克 净重: 15千克
材积: 42 x 30 x 26 cm

YX-B703D

2 -3finger alloy lever & bracket
Return spring
Packing: 100PRS/CTN
G.W./N.W.: 17/16kgs
Meas: 42 x 30 x 26 cm
2-3指式铝合金闸把、座架回位弹簧
包装: 100副/箱
毛重: 17千克 净重: 16千克
材积: 42 x 30 x 26 cm

YX-B238

2-3 finger alloy lever & bracket
Return spring
Packing: 100PRS/CTN
G.W./N.W.: 21/20kgs
Meas: 46 x 32 x 26 cm
2-3指式铝合金闸把、座架回位弹簧
包装: 100副/箱
毛重: 21千克 净重: 20千克
材积: 46 x 32 x 26 cm

YX-B905

2-3 finger alloy lever & bracket
Return spring
Packing: 100PRS/CTN
G.W./N.W.: 19/18kgs
Meas: 44 x 30 x 26 cm
2-3指式铝合金闸把、座架回位弹簧
包装: 100副/箱
毛重: 19千克 净重: 18千克
材积: 44 x 30 x 26 cm

YX-B906

3-4 finger alloy lever & bracket
Return spring
Packing: 100PRS/CTN
G.W./N.W.: 19/18kgs
Meas: 46 x 32 x 26 cm
3-4指式铝合金闸把、座架回位弹簧
包装: 100副/箱
毛重: 19千克 净重: 18千克
材积: 46 x 32 x 26 cm

YX-B118

3 finger alloy lever & bracket
Return spring
Packing: 100PRS/CTN
G.W./N.W.: 21/20kgs
Meas: 44 x 30 x 26 cm
3指式铝合金闸把、座架回位弹簧
包装: 100副/箱
毛重: 19千克 净重: 18千克
材积: 44 x 30 x 26 cm

NEW

YX-B116

3-4 finger alloy lever & bracket
Return spring
Packing: 100PRS/CTN
G.W./N.W.: 19/18kgs
Meas: 44 x 30 x 26 cm
3-4指式铝合金闸把、座架回位弹簧
包装: 100副/箱
毛重: 19千克 净重: 18千克
材积: 44 x 30 x 26 cm

NEW

YX-B702A

3-4 finger alloy lever & bracket
Return spring
Packing: 100PRS/CTN
G.W./N.W.: 19/18kgs
Meas: 44 x 30 x 26 cm
3-4指式铝合金闸把、座架回位弹簧
包装: 100副/箱
毛重: 19千克 净重: 18千克
材积: 44 x 30 x 26 cm

NEW

YX-B505

2-3 finger alloy lever & bracket
Return spring
Packing: 50PRS/CTN
G.W./N.W.: 10/9kgs
Meas: 36 x 26 x 23 cm
2-3指式铝合金闸把、座架回位弹簧
包装: 50副/箱
毛重: 10千克 净重: 9千克
材积: 36 x 26 x 23 cm

YX-B38

Racing steel(C.P.) light alloy lever & braket
Clamp diam: 22.2mm
Packing: 50PRS/CTN
G.W./N.W.: 18/17kgs
Meas: 44 x 26 x 25 cm
赛车用钢制（镀铬）轻合金闸把
安装直径：22.2mm
包装: 50副/箱
毛重: 18千克 净重: 17千克
材积: 44 x 26 x 25 cm

YX-B507

3-4 finger alloy lever & bracket
Return spring
Packing: 100PRS/CTN
G.W./N.W.: 19/18kgs
Meas: 46 x 30 x 26 cm
3-4指式铝合金闸把、座架回位弹簧
包装: 100副/箱
毛重: 19千克 净重: 18千克
材积: 46 x 30 x 26 cm

YX-B507PA

3-4 finger alloy lever & bracket
Return spring
Packing: 100PRS/CTN
G.W./N.W.: 19/18kgs
Meas: 46 x 30 x 26 cm
3-4指式铝合金闸把、座架回位弹簧
包装: 100副/箱
毛重: 19千克 净重: 18千克
材积: 46 x 30 x 26 cm

NEW

半铝刹把

half-alloy
brake lever

YX-B129

3 finger alloy lever & bracket Return spring
Packing: 100PRS/CTN
G.W./N.W.: 18/17kgs
Meas: 46 x 32 x 26 cm
3指式铝合金闸把、座架回位弹簧
包装: 100副/箱
毛重: 18千克 净重: 17千克
材积: 46 x 32 x 26 cm

YX-B605

3-4 finger alloy lever &
nylon-composite bracket, return spring
Packing: 100PRS/CTN
G.W./N.W.: 18/17kgs
Meas: 46 x 32 x 26 cm
3-4 指式铝合金闸把、尼龙合成座架回位弹簧
包装: 100副/箱
毛重: 18千克 净重: 17千克
材积: 46 x 32 x 26 cm

YX-B115

3 finger alloy lever &
nylon-composite bracket, return spring
Packing: 100PRS/CTN
G.W./N.W.: 18/17kgs
Meas: 46 x 32 x 26 cm
3指式铝合金闸把、尼龙合成座架回位弹簧
包装: 100副/箱
毛重: 18千克 净重: 17千克
材积: 46 x 32 x 26 cm

YX-B606

Resin Bracket and Die-cast Alloy Lever
2.5-3finger length for V-type or side-pull brake (BL)
Packing: 100PRS/CTN 18/17kgs
Meas: 46 x 32 x 26 cm
尼龙加纤无毒耐寒蝶，压铸铝合金握把可配V夹与侧拉夹器
指幅类型: 3.0相容thumb或twist
包装: 100套/箱
毛重: 18千克 净重: 17千克
材积: 46 x 32 x 26 cm

YX-B09

2-3 finger alloy leve &
nylon-composite bracket, return spring
Packing: 100PRS/CTN
G.W./N.W.: 18/17kgs
Meas: 46 x 32 x 26 cm
2-3指式铝合金闸把、尼龙合成座架回位弹簧
包装: 100副/箱
毛重: 18千克 净重: 17千克
材积: 46 x 32 x 26 cm

YX-B602

3-4 finger alloy lever &
nylon-composite bracket, return spring
Packing: 100PRS/CTN
G.W./N.W.: 18/17kgs
Meas: 46 x 32 x 26 cm
3-4指式铝合金闸把、尼龙合成座架回位弹簧
包装: 100副/箱
毛重: 18千克 净重: 17千克
材积: 46 x 32 x 26 cm

YX-B508

3 finger alloy lever &
nylon-composite bracket, return spring
Packing: 100PRS/CTN
G.W./N.W.: 18/17kgs
Meas: 44 x 30 x 26 cm
3指式铝合金闸把
尼龙合成座架回位弹簧
包装: 100副/箱
毛重: 18千克 净重: 17千克
材积: 44 x 30 x 26 cm

YX-B48

4 finger alloy lever &
nylon-composite bracket, return spring
Packing: 100PRS/CTN
G.W./N.W.: 19/18kgs
Meas: 46 x 34 x 27 cm
4指式铝合金闸把
尼龙合成座架
回位弹簧
包装: 100副/箱
毛重: 19千克 净重: 18千克
材积: 46 x 34 x 27 cm

YX-B510

2-3 finger alloy lever &
nylon-composite bracket, return spring
Packing: 100PRS/CTN
G.W./N.W.: 18/17kgs
Meas: 44 x 30 x 26 cm
2-3指式铝合金闸把
尼龙合成座架回位弹簧
包装: 100副/箱
毛重: 18千克 净重: 17千克
材积: 44 x 30 x 26 cm

YX-B45

2-3 finger alloy lever &
nylon-composite bracket, return spring
Packing: 100PRS/CTN
G.W./N.W.: 19/18kgs
Meas: 46 x 34 x 27 cm
2-3指式铝合金闸把、尼龙合成座架
回位弹簧
包装: 100副/箱
毛重: 19千克 净重: 18千克
材积: 46 x 34 x 27 cm

YX-B702

3-4 finger alloy lever &
nylon-composite bracket, return spring
Packing: 100PRS/CTN
G.W./N.W.: 19/18kgs
Meas: 44 x 30 x 26 cm
3-4指式铝合金闸把、尼龙合成座架
回位弹簧
包装: 100副/箱
毛重: 19千克 净重: 18千克
材积: 44 x 30 x 26 cm

YX-B609

4 finger alloy lever &
nylon-composite bracket, return spring
Packing: 100PRS/CTN
G.W./N.W.: 19/18kgs
Meas: 46 x 34 x 27 cm
4指式铝合金闸把
尼龙合成座架
回位弹簧
包装: 100副/箱
毛重: 19千克 净重: 18千克
材积: 46 x 34 x 27 cm

YX-B511

3-4 finger alloy lever &
nylon-composite bracket, return spring
Packing: 100PRS/CTN
G.W./N.W.: 18/17kgs
Meas: 46 x 32 x 26 cm
3-4指式铝合金闸把、尼龙合成座架
回位弹簧
包装: 100副/箱
毛重: 18千克 净重: 17千克
材积: 46 x 32 x 26 cm

YX-B09A

4 finger alloy lever &
nylon-composite bracket, return spring
Packing: 100PRS/CTN
G.W./N.W.: 18/17kgs
Meas: 46 x 34 x 27 cm
4指式铝合金闸把、尼龙合成座架
回位弹簧
包装: 100副/箱
毛重: 18千克 净重: 17千克
材积: 46 x 34 x 27 cm

YX-B512

2-3 finger alloy lever &
nylon-composite bracket, return spring
Packing: 100PRS/CTN
G.W./N.W.: 18/17kgs
Meas: 46 x 32 x 26 cm
2-3指式铝合金闸把、尼龙合成座架
回位弹簧
包装: 100副/箱
毛重: 18千克 净重: 17千克
材积: 46 x 32 x 26 cm

YX-B513

3 finger alloy lever &
nylon-composite bracket, return spring
Packing: 100PRS/CTN
G.W./N.W.: 18/17kgs
Meas: 46 x 32 x 26 cm
3指式铝合金闸把
增强尼龙座架回位弹簧
包装: 100副/箱
毛重: 18千克 净重: 17千克
材积: 46 x 32 x 26 cm

YX-B320PA

2-3 finger alloy lever &
nylon-composite bracket, return spring
Packing: 100PRS/CTN
G.W./N.W.: 16/15kgs
Meas: 44 x 30 x 26 cm
2-3指式铝合金闸把、尼龙合成座架
回位弹簧
包装: 100副/箱
毛重: 16千克 净重: 15千克
材积: 44 x 30 x 26 cm

YX-B43

2-3 finger alloy lever &
nylon-composite bracket, return spring
Packing: 100PRS/CTN
G.W./N.W.: 20/19kgs
Meas: 46 x 32 x 26 cm
2-3指式铝合金闸把、尼龙合成座架
回位弹簧
包装: 100副/箱
毛重: 20千克 净重: 19千克
材积: 46 x 32 x 26 cm

YX-B405PA

2-3 finger alloy lever &
nylon-composite bracket, return spring
Packing: 100PRS/CTN
G.W./N.W.: 17/16kgs
Meas: 44 x 30 x 26 cm
2-3指式铝合金闸把、尼龙合成座架
回位弹簧
包装: 100副/箱
毛重: 17千克 净重: 16千克
材积: 44 x 30 x 26 cm

YX-B409

2-3 finger alloy lever &
nylon-composite bracket, return spring
Packing: 100PRS/CTN
G.W./N.W.: 17/16kgs
Meas: 46 x 32 x 26 cm
2-3指式铝合金闸把、尼龙合成座架
回位弹簧
包装: 100副/箱
毛重: 17千克 净重: 16千克
材积: 46 x 32 x 26 cm

YX-B703C

2-3 finger alloy lever &
nylon-composite bracket, return spring
Packing: 100PRS/CTN
G.W./N.W.: 17/16kgs,
Meas: 44 x 30 x 26 cm
2-3指式铝合金闸把、尼龙合成座架
回位弹簧
包装: 100副/箱
毛重: 17千克 净重: 16千克
材积: 44 x 30 x 26 cm

YX-B236

3 finger alloy lever &
nylon-composite bracket, return spring
Packing: 100PRS/CTN
G.W./N.W.: 18/17kgs
Meas: 46 x 32 x 26 cm
3指式铝合金闸把、尼龙合成座架
回位弹簧
包装: 100副/箱
毛重: 18千克 净重: 17千克
材积: 46 x 32 x 26 cm

YX-B903

2-3 finger alloy lever &
nylon-composite bracket, return spring
Packing: 100PRS/CTN
G.W./N.W.: 16/15kgs
Meas: 42 x 30 x 26 cm
2-3指式铝合金闸把、尼龙合成
座架回位弹簧
包装: 100副/箱
毛重: 16千克 净重: 15千克
材积: 42 x 30 x 26 cm

YX-B904

2-3 finger alloy lever &
nylon-composite bracket, return spring
Packing: 100PRS/CTN
G.W./N.W.: 16/15kgs
Meas: 46 x 32 x 26 cm
2-3指式铝合金闸把、尼龙合成
座架回位弹簧
包装: 100副/箱
毛重: 16千克 净重: 15千克
材积: 46 x 32 x 26 cm

包塑刹把

plastic brake lever

YX-B02A

3-4 finger nylon-composite lever with steel insertion and return spring
Packing: 100PRS/CTN
G.W./N.W.: 18/17kgs
Meas: 46 x 32 x 27 cm
3-4指式尼龙钢芯合成闸把、座架
回位弹簧
包装: 100副/箱
毛重: 18千克 净重: 17千克
材积: 46 x 32 x 27 cm

YX-B30

2-3 finger nylon-composite lever & bracket with steel insertion and return spring
Packing: 100PRS/CTN
G.W./N.W.: 18/17kgs
Meas: 46 x 32 x 26 cm
2-3指式尼龙钢芯合成闸把、座架
回位弹簧
包装: 100副/箱
毛重: 18千克 净重: 17千克
材积: 46 x 32 x 26 cm

YX-B47

4 finger nylon-composite lever with steel insertion and return spring
Packing: 100PRS/CTN
G.W./N.W.: 19/18kgs
Meas: 46 x 34 x 27 cm
4指式尼龙钢芯合成闸把、座架
回位弹簧
包装: 100副/箱
毛重: 19千克 净重: 18千克
材积: 46 x 34 x 27 cm

YX-B308

3-4 finger nylon-composite lever with steel insertion and return spring
Packing: 100PRS/CTN
G.W./N.W.: 17/16kgs
Meas: 46 x 34 x 27 cm
3-4指式尼龙钢芯合成闸把、座架
回位弹簧
包装: 100副/箱
毛重: 17千克 净重: 16千克
材积: 46 x 34 x 27 cm

YX-B44

2-3 finger nylon-composite lever with steel insertion and return spring
Packing: 100PRS/CTN
G.W./N.W.: 19/18kgs
Meas: 46 x 34 x 27 cm
2-3指式尼龙钢芯合成闸把、座架
回位弹簧
包装: 100副/箱
毛重: 19千克 净重: 18千克
材积: 46 x 34 x 27 cm

YX-B16

2-3 finger nylon-composite lever with steel insertion and return spring
Packing: 100PRS/CTN
G.W./N.W.: 18/17kgs
Meas: 46 x 32 x 26 cm
2-3指式尼龙钢芯合成闸把、座架
回位弹簧
包装: 100副/箱
毛重: 18千克 净重: 17千克
材积: 46 x 32 x 26 cm

YX-B16B

2-3 finger nylon-composite lever with steel insertion and return spring
Packing: 100PRS/CTN
G.W./N.W.: 18/17kgs
Meas: 46 x 32 x 26 cm
2-3指式尼龙钢芯合成闸把、座架
回位弹簧
包装: 100副/箱
毛重: 18千克 净重: 17千克
材积: 46 x 32 x 26 cm

YX-B416

2-3 finger nylon-composite lever with steel insertion and Return spring
Packing: 100PRS/CTN
G.W./N.W.: 17/16kgs
Meas: 46 x 32 x 26 cm
2-3指式尼龙钢芯合成闸把、座架
回位弹簧
包装: 100副/箱
毛重: 17千克 净重: 16千克
材积: 46 x 32 x 26 cm

YX-B42

2-3 finger nylon-composite lever with steel insertion and Return spring
Packing: 100PRS/CTN
G.W./N.W.: 18/17kgs
Meas: 46 x 32 x 26 cm
2-3指式尼龙钢芯合成闸把、座架
回位弹簧
包装: 100副/箱
毛重: 18千克 净重: 17千克
材积: 46 x 32 x 26 cm

YX-B123

2-3 finger nylon-composite lever with steel insertion and return spring
Packing: 100PRS/CTN
G.W./N.W.: 19/18kgs
Meas: 44 x 30 x 26 cm
2-3指式尼龙钢芯合成闸把、座架
回位弹簧
包装: 100副/箱
毛重: 19千克 净重: 18千克
材积: 44 x 30 x 26 cm

YX-B304

2-3 finger nylon-composite lever with steel insertion and return spring
Packing: 100PRS/CTN
G.W./N.W.: 19/18kgs
Meas: 44 x 30 x 26 cm
2-3指式尼龙钢芯合成闸把、座架
回位弹簧
包装: 100副/箱
毛重: 19千克 净重: 18千克
材积: 44 x 30 x 26 cm

YX-B46

2-3 finger nylon-composite lever with steel insertion and Return spring
Packing: 100PRS/CTN
G.W./N.W.: 17/16kgs
Meas: 46 x 34 x 27 cm
2-3指式尼龙钢芯合成闸把、座架
回位弹簧
包装: 100副/箱
毛重: 17千克 净重: 16千克
材积: 46 x 34 x 27 cm

YX-B306

3-4 finger nylon-composite lever with steel insertion and return spring
Packing: 100PRS/CTN
G.W./N.W.: 17/16kgs
Meas: 44 x 30 x 26 cm
3-4指式尼龙钢芯合成闸把、座架回位弹簧
包装: 100副/箱
毛重: 17千克 净重: 16千克
材积: 44 x 30 x 26 cm

YX-B323

2-3 finger nylon-composite lever with steel insertion
Return spring
Packing: 100PRS/CTN
G.W./N.W.: 19/18kgs
Meas: 46 x 32 x 26 cm
2-3指式尼龙钢芯合成闸把、座架回位弹簧
包装: 100副/箱
毛重: 19千克 净重: 18千克
材积: 46 x 32 x 26 cm

YX-B04

2 finger nylon-composite lever with steel insertion and return spring
Packing: 100PRS/CTN
G.W./N.W.: 18/17kgs
Meas: 44 x 30 x 26 cm
2指式尼龙钢芯合成闸把、座架回位弹簧
包装: 100副/箱
毛重: 18千克 净重: 17千克
材积: 44 x 30 x 26 cm

YX-B03

3-4 finger nylon-composite lever with steel insertion and return spring
Packing: 100PRS/CTN
G.W./N.W.: 19/18kgs
Meas: 46 x 34 x 27 cm
3-4指式尼龙钢芯合成闸把、座架回位弹簧
包装: 100副/箱
毛重: 19千克 净重: 18千克
材积: 46 x 34 x 27 cm

YX-B06

3 finger nylon-composite lever with steel insertion and return spring
Packing: 100PRS/CTN
G.W./N.W.: 18/17kgs
Meas: 46 x 34 x 27 cm
3指式尼龙钢芯合成闸把、座架回位弹簧
包装: 100副/箱
毛重: 18千克 净重: 17千克
材积: 46 x 34 x 27 cm

YX-B14

3 finger nylon-composite lever with steel insertion and return spring
Packing: 100PRS/CTN
G.W./N.W.: 19/18kgs
Meas: 46 x 34 x 27 cm
3指式尼龙钢芯合成闸把、座架回位弹簧
包装: 100副/箱
毛重: 19千克 净重: 18千克
材积: 46 x 34 x 27 cm

YX-B13

3-4 finger nylon-composite lever with steel insertion and return spring
Packing: 100PRS/CTN
G.W./N.W.: 19/18kgs
Meas: 46 x 32 x 26 cm
3-4指式尼龙钢芯合成闸把、座架回位弹簧
包装: 100副/箱
毛重: 19千克 净重: 18千克
材积: 46 x 32 x 26 cm

YX-B28

2 finger nylon-composite lever with steel insertion and return spring
Packing: 100PRS/CTN
G.W./N.W.: 17/16kgs
Meas: 44 x 30 x 26 cm
2指式尼龙钢芯合成闸把、座架回位弹簧
包装: 100副/箱
毛重: 17千克 净重: 16千克
材积: 44 x 30 x 26 cm

YX-B31

2-3 finger nylon-composite lever & bracket with steel insertion and return spring
Packing: 100PRS/CTN 17/16kgs,
Meas: 44 x 30 x 26 cm
2-3指式尼龙钢芯合成闸把、座架回位弹簧
包装: 100副/箱
毛重: 17千克 净重: 16千克
材积: 44 x 30 x 26 cm

YX-B27

3-4 finger nylon-composite lever with steel insertion and return spring
Packing: 100PRS/CTN
G.W./N.W.: 17/16kgs
Meas: 46 x 32 x 26 cm
3-4指式尼龙钢芯合成闸把、座架回位弹簧
包装: 100副/箱
毛重: 17千克 净重: 16千克
材积: 46 x 32 x 26 cm

YX-B405

2 finger nylon-composite lever with insertion Return spring
Packing: 100PRS/CTN 15/14kgs,
Meas: 44 x 30 x 26 cm
2指式尼龙钢芯合成闸把、座架回位弹簧
包装: 100副/箱
毛重: 15千克 净重: 14千克
材积: 44 x 30 x 26 cm

YX-B318

2-3 finger nylon-composite lever with insertion Return spring
Packing: 100PRS/CTN
G.W./N.W.: 19/18kgs
Meas: 44 x 30 x 26 cm
2-3指式尼龙钢芯合成闸把、座架回位弹簧
包装: 100副/箱
毛重: 19千克 净重: 18千克
材积: 44 x 30 x 26 cm

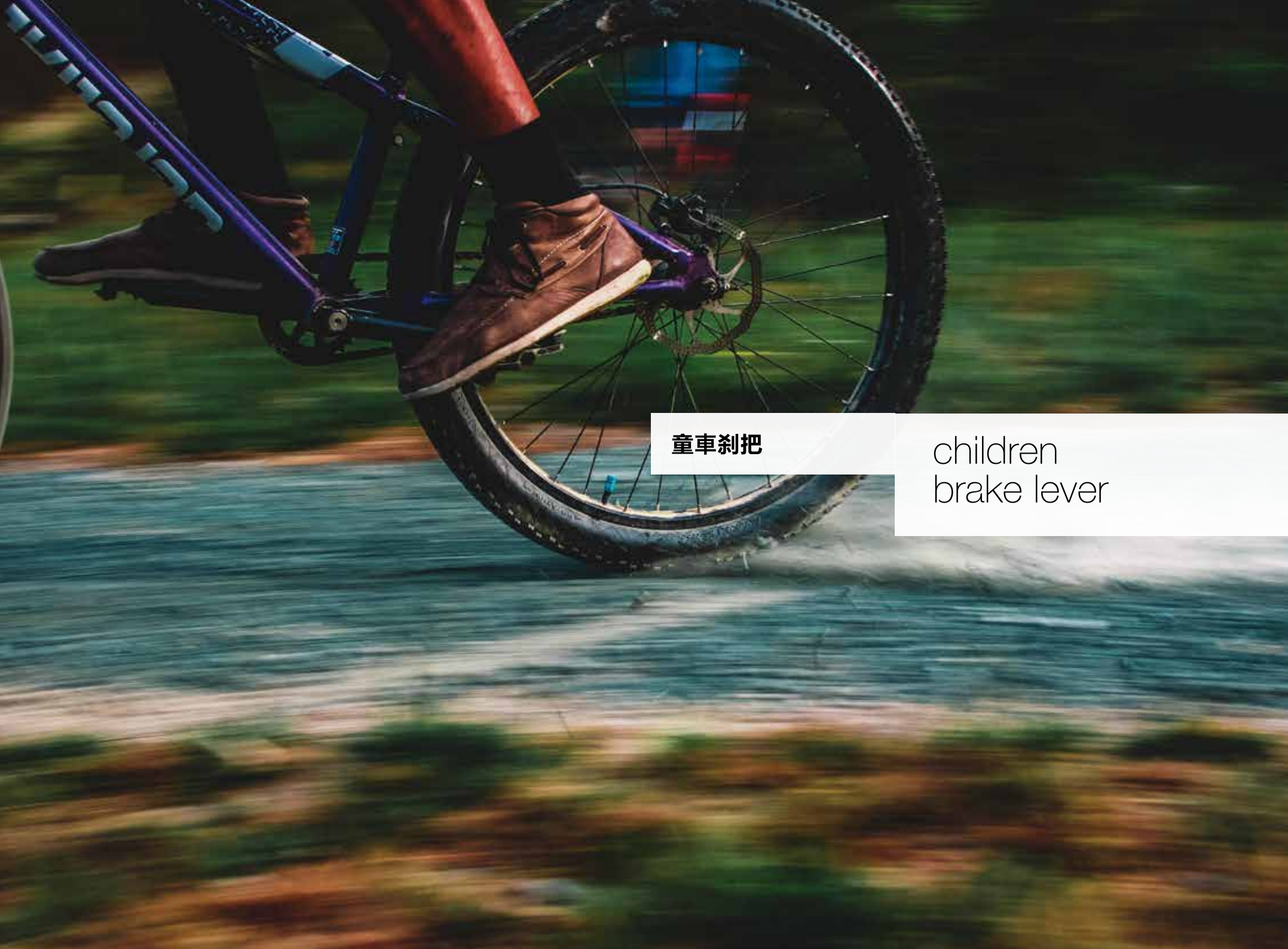

童車剎把

children brake lever

YX-B305B

YX-B305

2-3 finger nylon-composite lever
Return spring
Packing: 100PRS/CTN
G.W./N.W.: 17/16kgs
Meas: 44 x 30 x 26 cm
2-3指增强尼龙闸把、座架
回位弹簧
包装: 100副/箱
毛重: 17千克 净重: 16千克
材积: 44 x 30 x 26 cm

YX-B608

2-3 finger nylon-composite lever
Return spring
Packing: 100PRS/CTN
G.W./N.W.: 17/16kgs
Meas: 44 x 30 x 26 cm
2-3指增强尼龙闸把、座架
回位弹簧
包装: 100副/箱
毛重: 17千克 净重: 16千克
材积: 44 x 30 x 26 cm

YX-B303

2-3 finger nylon-composite lever with steel insertion and return spring
Packing: 100PRS/CTN
G.W./N.W.: 19/18kgs
Meas: 44 x 30 x 26 cm
2-3指式尼龙钢芯合成闸把、座架
回位弹簧
包装: 100副/箱
毛重: 19千克 净重: 18千克
材积: 44 x 30 x 26 cm

YX-B320

2-3 finger nylon-composite lever with steel insertion and return spring
Packing: 100PRS/CTN
G.W./N.W.: 19/18kgs
Meas: 44 x 30 x 26 cm
2-3指式尼龙钢芯合成闸把、座架
回位弹簧
包装: 100副/箱
毛重: 19千克 净重: 18千克
材积: 44 x 30 x 26 cm

YX-B506

2 finger High-grade resin lever with steel insertion and return spring
Packing: 100PRS/CTN
G.W./N.W.: 17/16kgs
Meas: 42 x 30 x 26 cm
2指式工程塑料合成闸把、座架
回位弹簧
包装: 100副/箱
毛重: 17千克 净重: 16千克
材积: 42 x 30 x 26 cm

YX-B319A

YX-B319D

2-3 finger nylon-composite lever with steel insertion and return spring
Packing: 100PRS/CTN
G.W./N.W.: 19/18kgs
Meas: 44 x 30 x 26 cm
2-3指式尼龙钢芯合成闸把、座架
回位弹簧
包装: 100副/箱
毛重: 19千克 净重: 18千克
材积: 44 x 30 x 26 cm

YX-B321

2-3 finger nylon-composite lever with steel insertion and return spring
Packing: 100PRS/CTN
G.W./N.W.: 17/16kgs
Meas: 46 x 28 x 23 cm
2-3指式尼龙钢芯合成闸把、钢制座架
包装: 100副/箱
毛重: 17千克 净重: 16千克
材积: 46 x 28 x 23 cm

YX-B322

2-3 finger nylon-composite lever with steel insertion and return spring
Packing: 100PRS/CTN
G.W./N.W.: 18/17kgs
Meas: 40 x 28 x 23 cm
2-3指式尼龙钢芯合成闸把、座架
回位弹簧
包装: 100副/箱
毛重: 18千克 净重: 17千克
材积: 40 x 28 x 23 cm

YX-B324

2-3 finger nylon-composite lever with steel insertion and return spring
Packing: 100PRS/CTN
G.W./N.W.: 18/17kgs
Meas: 40 x 28 x 23 cm
2-3指式尼龙钢芯合成闸把、座架
回位弹簧
包装: 100副/箱
毛重: 18千克 净重: 17千克
材积: 40 x 28 x 23 cm

NEW

YX-B22

2-3 finger nylon-composite lever with steel insertion
Return spring
Packing: 100PRS/CTN
G.W./N.W.: 19/18kgs
Meas: 46 x 32 x 26 cm
2-3 指式尼龙钢芯合成闸把、座架回位弹簧
包装 : 100 副 / 箱
毛重 : 19 千克 净重 : 18 千克
材积 : 46 x 32 x 26 cm

NEW

YX-B15

2 finger nylon-composite lever with steel insertion
Return spring
Packing: 100PRS/CTN
G.W./N.W.: 19/18kgs
Meas: 46 x 32 x 26 cm
2-3 指式尼龙钢芯合成闸把、座架回位弹簧
包装 : 100 副 / 箱
毛重 : 19 千克 净重 : 18 千克
材积 : 46 x 32 x 26 cm

NEW

YX-B421

Finger-safe design for kid
Resin bracket and Melt forged aluminum lever
Suitable for thumb shift
2.0 finger lever
Standard finish:black bracket and lever
Weight:71g/PC

YX-B307

2-3 finger nylon-composite lever with steel insertion and return spring
Packing: 100PRS/CTN
G.W./N.W.: 18/17kgs
Meas: 40 x 28 x 23 cm
2-3指式尼龙钢芯合成闸把、座架回位弹簧
包装: 100副/箱
毛重: 18千克 净重: 17千克
材积: 40 x 28 x 23 cm

YX-B301

2-3 finger nylon-composite lever with steel insertion and return spring
Packing: 100PRS/CTN
G.W./N.W.: 16/15kgs
Meas: 40 x 28 x 23 cm
2-3指式尼龙钢芯合成闸把、座架回位弹簧
包装: 100副/箱
毛重: 16千克 净重: 15千克
材积: 40 x 28 x 23 cm

全铝V型閘

alloy
v-brake

YX-C230

Light alloy V-brake arms
Linear spring tension adjustment
Color: colorful
Arm length(m/m): 110mm
Brake shoes: 50mm, 60mm, 70mm
Packing: 50 Sets/CTN
G.W./N.W.: 21/20kgs
Meas: 42 x 28 x 23 cm
轻合金"V"闸
线性弹簧拉紧调节
表面处理: 各种颜色
臂长: 110mm
闸皮长度: 50mm, 60mm, 70mm
包装: 50套/箱
毛重: 21千克　净重: 20千克
材积: 42 x 28 x 23 cm

YX-C231

Light alloy V-brake arms
Linear spring tension adjustment
Color: colorful
Arm length(m/m): 110mm
Brake shoes: 50mm, 60mm, 70mm
Packing: 50 Sets/CTN
G.W./N.W.: 21/20kgs
Meas: 42 x 28 x 23 cm
轻合金"V"闸
线性弹簧拉紧调节
表面处理: 各种颜色
臂长: 110mm
闸皮长度: 50mm, 60mm, 70mm
包装: 50套/箱
毛重: 21千克　净重: 20千克
材积: 42 x 28 x 23 cm

YX-C232

Light alloy V-brake arms
Coiled spring tension adjustment
Color: colorful
Arm length(m/m): 110mm
Brake shoes: 50mm, 60mm, 70mm
Packing: 50 Sets/CTN
G.W./N.W.: 21/20kgs
Meas: 42 x 28 x 23 cm
轻合金"V"闸
圈型回复弹簧拉紧调节
表面处理: 各种颜色
臂长: 110mm
闸皮长度: 50mm, 60mm, 70mm
包装: 50套/箱
毛重: 21千克　净重: 20千克
材积: 42 x 28 x 23 cm

YX-C233

Light alloy V-brake arms
Linear spring tension adjustment
Color: colorful
Arm length(m/m): 110mm
Brake shoes: 50mm, 60mm, 70mm
Packing: 50 Sets/CTN
G.W./N.W.: 21/20kgs
Meas: 42 x 28 x 23 cm
轻合金"V"闸
线性弹簧拉紧调节
表面处理: 各种颜色
臂长: 110mm
闸皮长度: 50mm, 60mm, 70mm
包装: 50套/箱
毛重: 21千克　净重: 20千克
材积: 42 x 28 x 23 cm

YX-C215

Light alloy V-brake arms
Linear spring tension adjustment
Color: colorful
Arm length(m/m): 110mm
Brake shoes: 50mm, 60mm, 70mm
Packing: 50 Sets/CTN
G.W./N.W.: 21/20kgs
Meas: 42 x 28 x 23 cm
轻合金"V"闸
线性弹簧拉紧调节
表面处理: 各种颜色
臂长: 110mm
闸皮长度: 50mm, 60mm, 70mm
包装: 50套/箱
毛重: 21千克　净重: 20千克
材积: 42 x 28 x 23 cm

YX-C216

Light alloy V-brake arms
Coiled spring tension adjustment
Color: colorful
Arm length(m/m): 110mm
Brake shoes: 50mm, 60mm, 70mm
Packing: 50 Sets/CTN
G.W./N.W.: 21/20kgs
Meas: 36 x 26 x 29 cm
轻合金"V"闸
圈型回复弹簧拉紧调节
表面处理: 各种颜色
臂长: 110mm
闸皮长度: 50mm, 60mm, 70mm
包装: 50套/箱
毛重: 21千克　净重: 20千克
材积: 36 x 26 x 29 cm

YX-C229

Light alloy V-brake arms
Linear spring tension adjustment
Color: colorful
Arm length(m/m): 110mm
Brake shoes: 50mm, 60mm, 70mm
Packing: 50 Sets/CTN
G.W./N.W.: 21/20kgs
Meas: 36 x 26 x 29 cm
轻合金"V"闸
线性弹簧拉紧调节
表面处理: 各种颜色
臂长: 110mm
闸皮长度: 50mm, 60mm, 70mm
包装: 50套/箱
毛重: 21千克　净重: 20千克
材积: 36 x 26 x 29 cm

YX-C228

Light alloy V-brake arms
Linear spring tension adjustment
Color: colorful
Arm length(m/m): 110mm
Brake shoes: 50mm, 60mm, 70mm
Packing: 50 Sets/CTN
G.W./N.W.: 21/20kgs
Meas: 36 x 26 x 29 cm
轻合金"V"闸
线性弹簧拉紧调节
表面处理: 各种颜色
臂长: 110mm
闸皮长度: 50mm, 60mm, 70mm
包装: 50套/箱
毛重: 21千克　净重: 20千克
材积: 36 x 26 x 29 cm

YX-C22

Light alloy V-brake arms
Linear spring tension adjustment
Color: colorful
Arm length(m/m): 110mm
Brake shoes: 50mm, 60mm, 70mm
Packing: 50 Sets/CTN
G.W./N.W.: 21/20kgs
Meas: 36 x 26 x 29 cm
轻合金"V"闸
线性弹簧拉紧调节
表面处理: 各种颜色
臂长: 110mm
闸皮长度: 50mm, 60mm, 70mm
包装: 50套/箱
毛重: 21千克　净重: 20千克
材积: 36 x 26 x 29 cm

反向型
REVERSED

YX-C235

Light alloy V-brake arms
Linear spring tension adjustment
Color: colorful
Arm length(m/m): 110mm
Brake shoes: 50mm, 60mm, 70mm
Packing: 50 Sets/CTN
G.W./N.W.: 21/20kgs
Meas: 36 x 26 x 29 cm
轻合金"V"闸
线性弹簧拉紧调节
表面处理: 各种颜色
臂长: 110mm
闸皮长度: 50mm, 60mm, 70mm
包装: 50套/箱
毛重: 21千克　净重: 20千克
材积: 36 x 26 x 29 cm

YX-C203

Light alloy V-brake arms
Dual spring tension adjustment
Color: colorful
Arm length(m/m): 110mm
Brake shoes: 50mm, 60mm, 70mm
Packing: 50 Sets/CTN
G.W./N.W.: 21/20kgs
Meas: 36 x 26 x 27 cm
轻合金"V"闸
双重弹簧拉紧调节
表面处理: 各种颜色
臂长: 110mm
闸皮长度: 50mm、60mm、70mm
包装: 50套/箱
毛重: 21千克 净重: 20千克
材积: 36 x 26 x 27 cm

YX-C225

Light alloy V-brake arms
Dual spring tension adjustment
Color: colorful
Arm length(m/m): 102mm
Brake shoes: 50mm, 60mm, 70mm
Packing: 50 Sets/CTN
G.W./N.W.: 21/20kgs
Meas: 41 x 28 x 23 cm
轻合金"V"闸
双重弹簧拉紧调节
表面处理: 各种颜色
臂长: 102mm
闸皮长度: 50mm、60mm、70mm
包装: 50套/箱
毛重: 21千克 净重: 20千克
材积: 41 x 28 x 23 cm

YX-C224

Light alloy V-brake arms
Dual spring tension adjustment
Color: colorful
Arm length(m/m): 93mm
Brake shoes: 50mm, 60mm, 70mm
Packing: 50 Sets/CTN
G.W./N.W.: 18.5/17.5kgs
Meas: 41 x 28 x 23 cm
轻合金"V"闸
双重弹簧拉紧调节
表面处理: 各种颜色
臂长: 93mm
闸皮长度: 50mm、60mm、70mm
包装: 50套/箱
毛重: 18.5千克 净重: 17.5千克
材积: 41 x 28 x 23 cm

YX-C28

Light alloy V-brake arms
Dual spring tension adjustment
Color: colorful
Arm length(m/m): 115mm
Brake shoes: 50mm, 60mm, 70mm
Packing: 50 Sets/CTN
G.W./N.W.: 21/20kgs
Meas: 36 x 26 x 29 cm
轻合金"V"闸
双重弹簧拉紧调节
表面处理: 各种颜色
臂长: 115mm
闸皮长度: 50mm、60mm、70mm
包装: 50套/箱
毛重: 21千克 净重: 20千克
材积: 36 x 26 x 29 cm

YX-C227

Light alloy V-brake arms
Dual spring tension adjustment
Color: colorful
Arm length(m/m): 110mm
Brake shoes: 50mm, 60mm, 70mm
Packing: 50 Sets/CTN
G.N/W: 21/20kgs
Meas: 36 x 26 x 29 cm
轻合金"V"闸
双重弹簧拉紧调节
表面处理: 各种颜色
臂长: 110mm
闸皮长度: 50mm、60mm、70mm
包装: 50套/箱
毛重: 21千克 净重: 20千克
材积: 36 x 26 x 29 cm

YX-C32

Light alloy V-brake arms
Linear spring tension adjustment
Color: colorful
Arm length(m/m): 120mm, 110mm
Brake shoes: 50mm, 60mm, 70mm
Packing: 50 Sets/CTN
G.N/W: 21/20kgs
Meas: 36 x 26 x 29 cm
轻合金"V"闸
线型弹簧拉紧调节
表面处理: 各种颜色
臂长: 120mm、110mm
闸皮长度: 50mm、60mm、70mm
包装: 50套/箱
毛重: 21千克 净重: 20千克
材积: 36 x 26 x 29 cm

YX-C33

Light alloy V-brake arms
Coiled spring tension adjustment
Color: colorful
Arm length(m/m): 110mm
Brake shoes: 50mm, 60mm, 70mm
Packing: 50 Sets/CTN
G.N/W: 21/20kgs
Meas: 36 x 26 x 29 cm
轻合金"V"闸
圈型回复弹簧拉紧调节
表面处理: 各种颜色
臂长: 110mm
闸皮长度: 50mm、60mm、70mm
包装: 50套/箱
毛重: 21千克 净重: 20千克
材积: 36 x 26 x 29 cm

YX-C226

Light alloy V-brake arms
Linear spring tension adjustment
Color: colorful
Arm length(m/m): 93 mm
Brake shoes: 50mm, 60mm, 70mm
Packing: 50 Sets/CTN
G.W./N.W.: 21/20kgs
Meas: 41 x 28 x 23 cm
轻合金"V"闸
线性弹簧拉紧调节
表面处理: 各种颜色
臂长: 93 mm
闸皮长度: 50mm, 60mm, 70mm
包装: 50套/箱
毛重: 21千克 净重: 20千克
材积: 41 x 28 x 23 cm

YX-C34

Light alloy V-brake arms
Linear spring tension adjustment
Color: colorful
Arm length(m/m): 95 mm
Brake shoes: 50mm, 60mm, 70mm
Packing: 50 Sets/CTN
G.W./N.W.: 21/20kgs
Meas: 41 x 28 x 23 cm
轻合金"V"闸
线性弹簧拉紧调节
表面处理: 各种颜色
臂长: 95 mm
闸皮长度: 50mm, 60mm, 70mm
包装: 50套/箱
毛重: 21千克 净重: 20千克
材积: 41 x 28 x 23 cm

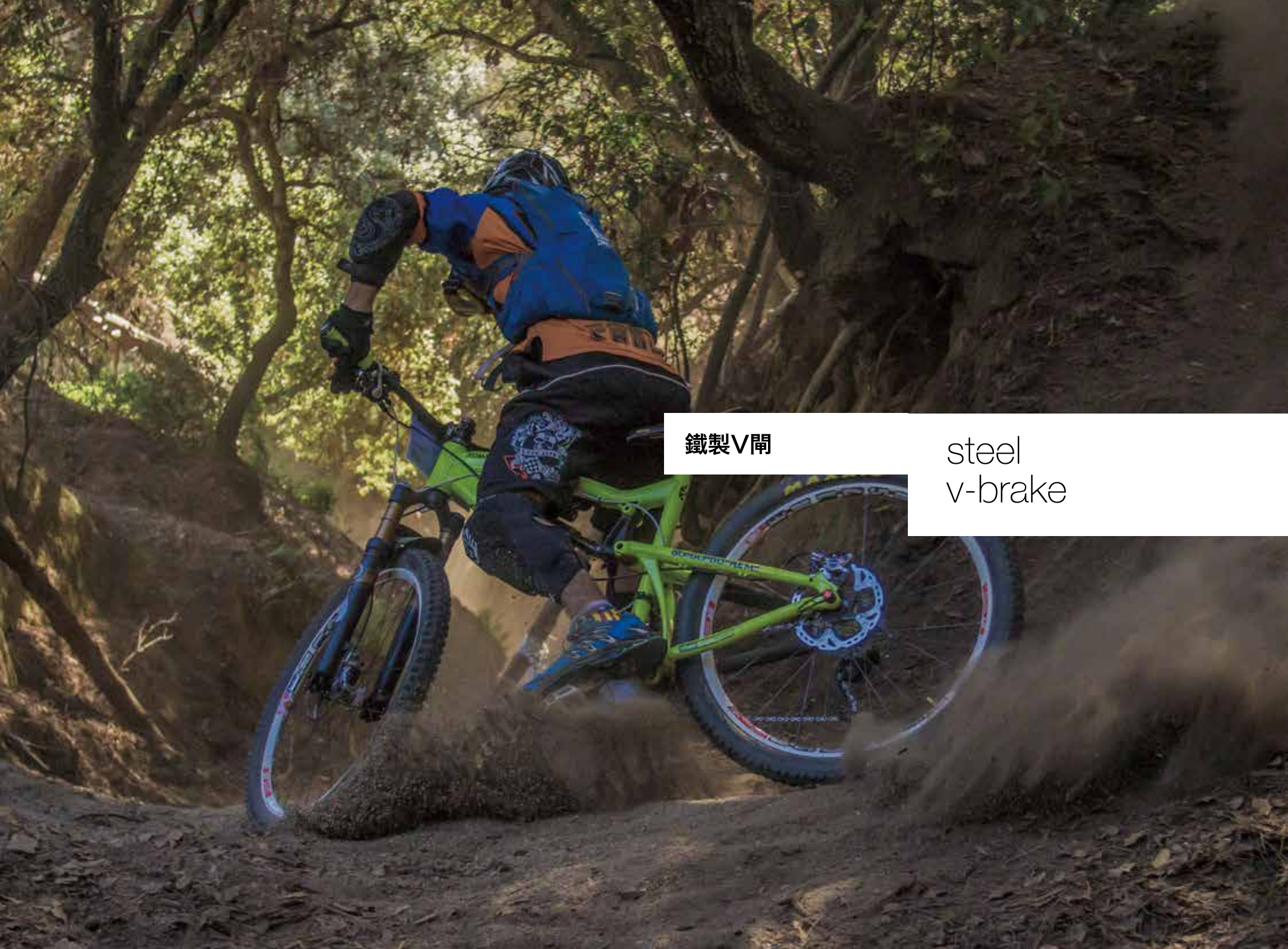

鐵製V閘

steel
v-brake

YX-C18

Steel-reinforced steel V-brake arms
Linear spring tension adjustment
Finish: CP. ED Black
Arm length(m/m): 110mm
Brake shoes: 50mm, 60mm, 70mm
Packing: 50 Sets/CTN
G.W./N.W.: 23/22kgs
Meas: 36 x 26 x 27 cm
增强钢制"V"闸
线型弹簧拉紧调节
表面处理: 镀铬或电泳黑
臂长: 110mm
闸皮长度: 50mm、60mm、70mm
包装: 50套/箱
毛重: 23千克 净重: 22千克
材积: 36 x 26 x 27 cm

YX-C18A

Steel-reinforced steel V-brake arms
Linear spring tension adjustment
Finish: CP. ED Black
Arm length(m/m): 105mm
Brake shoes: 50mm, 60mm, 70mm
Packing: 50 Sets/CTN
G.W./N.W.: 23/22kgs
Meas: 36 x 26 x 27 cm
增强钢制"V"闸
线型弹簧拉紧调节
表面处理: 镀铬或电泳黑
臂长: 105mm
闸皮长度: 50mm、60mm、70mm
包装: 50套/箱
毛重: 23千克 净重: 22千克
材积: 36 x 26 x 27 cm

YX-C18B

Steel-reinforced steel V-brake arms
Linear spring tension adjustment
Finish: CP. ED Black
Arm length(m/m): 120mm
Brake shoes: 50mm, 60mm, 70mm
Packing: 50 Sets/CTN
G.W./N.W.: 23/22kgs
Meas: 36 x 26 x 27 cm
增强钢制"V"闸
线型弹簧拉紧调节
表面处理: 镀铬或电泳黑
臂长: 120mm
闸皮长度: 50mm、60mm、70mm
包装: 50套/箱
毛重: 23千克 净重: 22千克
材积: 36 x 26 x 27 cm

YX-C19

Steel-reinforced steel V-brake arms
Linear spring tension adjustment
Finish: CP. ED Black
Arm length(m/m): 102mm
Brake shoes: 50mm, 60mm, 70mm
Packing: 50 Sets/CTN
G.W./N.W.: 23/22kgs
Meas: 36 x 26 x 27 cm
增强钢制"V"闸
线型弹簧拉紧调节
表面处理: 镀铬或电泳黑
臂长: 102mm
闸皮长度: 50mm、60mm、70mm
包装: 50套/箱
毛重: 23千克 净重: 22千克
材积: 36 x 26 x 27 cm

YX-C18C

Steel-reinforced steel V-brake arms
Linear spring tension adjustment
Finish: CP. ED Black
Arm length(m/m): 115mm
Brake shoes: 50mm, 60mm, 70mm
Packing: 50 Sets/CTN
G.W./N.W.: 23/22kgs
Meas: 36 x 26 x 27 cm
增强钢制"V"闸
线型弹簧拉紧调节
表面处理: 镀铬或电泳黑
臂长: 115mm
闸皮长度: 50mm、60mm、70mm
包装: 50套/箱
毛重: 23千克 净重: 22千克
材积: 36 x 26 x 27 cm

YX-C18D

Steel-reinforced steel V-brake arms
Linear spring tension adjustment
Finish: CP. ED Black
Arm length(m/m): 102/105/110/115/120 mm
Brake shoes: 50mm, 60mm, 70mm
Packing: 50 Sets/CTN
G.W./N.W.: 23/22kgs
Meas: 36 x 26 x 27 cm
增强钢制"V"闸
线型弹簧拉紧调节
表面处理: 镀铬或电泳黑
臂长: 102/105/110/115/120 mm
闸皮长度: 50mm、60mm、70mm
包装: 50套/箱
毛重: 23千克 净重: 22千克
材积: 36 x 26 x 27 cm

YX-C29

Steel-reinforced steel V-brake arms
Linear spring tension adjustment
Finish: CP. ED Black
Arm length(m/m): 110mm
Brake shoes: 50mm, 60mm, 70mm
Packing: 50 Sets/CTN
G.W./N.W.: 23/22kgs
Meas: 36 x 26 x 27 cm
增强钢制"V"闸
线型弹簧拉紧调节
表面处理: 镀铬或电泳黑
臂长: 110mm
闸皮长度: 50mm、60mm、70mm
包装: 50套/箱
毛重: 23千克 净重: 22千克
材积: 36 x 26 x 27 cm

包塑v型閘

plastic v-brake

YX-C26

Steel-reinforced nylon composite V-brake arms
Dual spring tension adjustment
Arm length(m/m): 110mm
Brake shoes: 50mm, 60mm, 70mm
Packing: 50 Sets/CTN
G.W./N.W.: 22/21kgs
Meas: 43 x 26 x 27 cm
增强钢制尼龙合成"V"形闸臂
双重弹簧拉紧调节
臂长: 110mm
闸皮长度: 50mm、60mm、70mm
包装: 50套/箱
毛重: 22千克 净重: 21千克
材积: 43 x 26 x 27 cm

YX-C15

Steel-reinforced nylon composite V-brake arms
Dual spring tension adjustment
Arm length(m/m): 110mm
Brake shoes: 50mm, 60mm, 70mm
Packing: 50 Sets/CTN
G.W./N.W.: 23/22kgs
Meas: 43 x 26 x 27 cm
增强钢制尼龙合成"V"闸
双重弹簧拉紧调节
臂长: 110mm
闸皮长度: 50mm、60mm、70mm
包装: 50套/箱
毛重: 23千克 净重: 22千克
材积: 43 x 26 x 27 cm

YX-C15B

Steel-reinforced nylon composite V-brake arms
Dual spring tension adjustment
Arm length(m/m): 102mm
Brake shoes: 50mm, 60mm, 70mm
Packing: 50 Sets/CTN
G.W./N.W.: 23/22kgs
Meas: 43 x 26 x 27 cm
增强钢制尼龙合成"V"闸
双重弹簧拉紧调节
臂长: 102mm
闸皮长度: 50mm、60mm、70mm
包装: 50套/箱
毛重: 23千克 净重: 22千克
材积: 43 x 26 x 27 cm

YX-C06

Steel-reinforced nylon composite V-brake arms
Dual spring tension adjustment
Arm length(m/m): 102mm
Brake shoes: 50mm, 60mm, 70mm
Packing: 50 Sets/CTN
G.W./N.W.: 22.5/21.5kgs
Meas: 43 x 26 x 27 cm
增强钢制尼龙合成"V"闸
双重弹簧拉紧调节
臂长: 102mm
闸皮长度: 50mm、60mm、70mm
包装: 50套/箱
毛重: 22.5千克 净重: 21.5千克
材积: 43 x 26 x 27 cm

YX-C07

Steel-reinforced nylon composite V-brake arms
Dual spring tension adjustment
Arm length(m/m): 110mm
Brake shoes: 50mm, 60mm, 70mm
Packing: 50 Sets/CTN
G.W./N.W.: 23/22kgs
Meas: 43 x 26 x 27 cm
增强钢制尼龙合成"V"闸
双重弹簧拉紧调节
臂长: 110mm
闸皮长度: 50mm、60mm、70mm
包装: 50套/箱
毛重: 23千克 净重: 22千克
材积: 43 x 26 x 27 cm

YX-C07A

Steel-reinforced nylon composite V-brake arms
Dual spring tension adjustment
Arm length(m/m): 120mm
Brake shoes: 50mm, 60mm, 70mm
Packing: 50 Sets/CTN
G.W./N.W.: 23/22kgs
Meas: 43 x 26 x 27 cm
增强钢制尼龙合成"V"闸
双重弹簧拉紧调节
臂长: 120mm
闸皮长度: 50mm、60mm、70mm
包装: 50套/箱
毛重: 23千克 净重: 22千克
材积: 43 x 26 x 27 cm

YX-C218

Light alloy cantilever brake arms
Brake shoes: 50-60mm
Packing: 50 Sets/CTN
G.W./N.W.: 20/19kgs
Meas: 36 x 26 x 25 cm
轻合金悬臂闸
闸皮长度: 50-60mm
包装: 50套/箱
毛重: 20千克 净重: 19千克
材积: 36 x 26 x 25 cm

YX-C02

Light alloy cantilever brake arms
Brake shoes: 50-60mm
Packing: 50 Sets/CTN
G.W./N.W.: 20/19kgs
Meas: 36 x 26 x 25 cm
轻合金悬臂闸
闸皮长度: 50-60mm
包装: 50套/箱
毛重: 20千克 净重: 19千克
材积: 36 x 26 x 25 cm

YX-C04

Nylon with steel-reinforced
insertion cantilever brake arms
Brake shoes: 50-60mm
Packing: 50 Sets/CTN
G.W./N.W.: 19/18kgs
Meas: 36 x 26 x 23 cm
增强钢芯尼龙悬臂闸
闸皮长度: 50-60mm
包装: 50套/箱
毛重: 19千克 净重: 18千克
材积: 36 x 26 x 23 cm

YX-C10

Nylon with steel-reinforced
insertion cantilever brake arms
Brake shoes: 50-60mm
Packing: 50 Sets/CTN
G.W./N.W.: 18/17kgs
Meas: 36 x 26 x 23 cm
增强钢芯尼龙悬臂闸
闸皮长度: 50-60mm
包装: 50套/箱
毛重: 18千克 净重: 17千克
材积: 36 x 26 x 23 cm

YX-C17

Nylon with steel-reinforced
insertion cantilever brake arms
Brake shoes: 50-60mm
Packing: 50 Sets/CTN
G.W./N.W.: 20/19kgs
Meas: 36 x 26 x 23 cm
增强钢芯尼龙悬臂闸
闸皮长度: 50-60mm
包装: 50套/箱
毛重: 20千克 净重: 19千克
材积: 36 x 26 x 23 cm

YX-C202

Nylon with steel-reinforced
insertion cantilever brake arms
Brake shoes: 50-60mm
Packing: 50 Sets/CTN
G.W./N.W.: 19/18kgs
Meas: 36 x 26 x 23 cm
增强钢芯尼龙悬臂闸
闸皮长度: 50-60mm
包装: 50套/箱
毛重: 19千克 净重: 18千克
材积: 36 x 26 x 23 cm

鉗型閘/U型閘

caliper brake
u-brake

YX-C30

light alloy U-brake arms
Brake shoes: 50mm, 60mm
Material: light alloy Color: to order
finish: oxidized, polish
Packing: 50 Sets/CTN
G.W./N.W.: 14/13kgs
Meas: 46 x 29 x 25 cm
轻合金"U"形闸臂
闸皮长度: 50mm,60mm
材料: 轻合金
颜色: 按需而定
表面处理: 氧化，磨光
包装: 50套/箱 毛重: 14千克
净重: 13千克
材积: 46 x 29 x 25 cm

YX-2200A

Light alloy reinforced caliper
brake arms, side pull.
Packing: 50 Sets/CTN
G.W./N.W.: 20/19kgs
Meas: 52 x 29 x 25 cm
轻合金侧拉式闸臂
表面处理: 银色
包装: 50套/箱
毛重: 20千克 净重: 19千克
材积: 52 x 29 x 25 cm

YX-2300A

Light alloy reinforced caliper
brake arms, side pull.
Packing: 50 Sets/CTN
G.W./N.W.: 20/19kgs
Meas: 52 x 29 x 25 cm
轻合金侧拉式闸臂
表面处理: 银色
包装: 50套/箱
毛重: 20千克 净重: 19千克
材积: 52 x 29 x 25 cm

YX-79A

Light alloy reinforced caliper brake arms, side pull.
Packing: 50PRS/CTN
G.W./N.W.: 19/18kgs
Meas: 52 x 29 x 31 cm
轻合金侧拉式闸臂
包装: 50副/箱
毛重: 19千克 净重: 18千克
材积: 52 x 31 x 29 cm

NEW

YX-81A

Light alloy reinforced caliper brake arms, side pull.
Packing: 50PRS/CTN
G.W./N.W.: 19/18kgs
Meas: 52 x 29 x 31 cm
轻合金侧拉式闸臂
包装: 50副/箱
毛重: 19千克 净重: 18千克
材积: 52 x 31 x 29 cm

YX-82A

Light alloy reinforced caliper brake arms, side pull.
Return spring
Packing: 50PRS/CTN
G.W./N.W.: 19/18kgs
Meas: 52 x 29 x 31 cm
轻合金侧拉式闸臂
包装: 50副/箱
毛重: 19千克 净重: 18千克
材积: 52 x 31 x 29 cm

YX-68

Steel-reinforced caliper brake arms, side pull.
Finish: ed black or cp.
Packing: 50 Sets/CTN
G.W./N.W.: 24/23kgs
Meas: 52 x 29 x 25 cm
增强钢制侧拉式闸臂
表面处理: 电泳漆，镀铬
包装: 50套/箱
毛重: 24千克 净重: 23千克
材积: 52 x 29 x 25 cm

YX-81

Steel-reinforced caliper brake arms, side pull.
Finish: ed black or cp.
Packing: 50 Sets/CTN
G.W./N.W.: 24/23kgs
Meas: 52 x 29 x 25 cm
增强钢制侧拉式闸臂
表面处理: 电泳漆，镀铬
包装: 50套/箱
毛重: 24千克 净重: 23千克
材积: 52 x 29 x 25 cm

YX-81B

Steel-reinforced caliper brake arms, side pull.
Finish: ed black or cp.
Packing: 50 Sets/CTN
G.W./N.W.: 24/23kgs
Meas: 52 x 29 x 25 cm
增强钢制侧拉式闸臂
表面处理: 电泳漆，镀铬
包装: 50套/箱
毛重: 24千克 净重: 23千克
材积: 52 x 29 x 25 cm

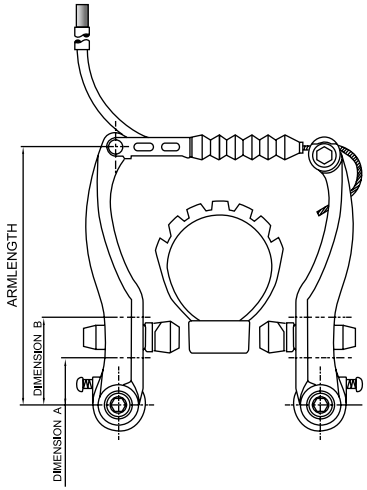

V-TYPE BRAKE

型号 Model	材质 Material	臂长 Arm Length(m/m)
YX-C215/ C216	Die-casted all	110
YX-C229	Die-casted all	110
YX-C224	Die-casted all	93
YX-C34	Die-casted all	95
YX-C32	Die-casted all	110/120
YX-C203	Die-casted all	110
YX-C228	Die-casted all	110
YX-C28	Die-casted all	115
YX-C22	Die-casted all	110
YX-C230	Die-casted all	110
YX-C225	Die-casted all	102
YX-C231	Die-casted all	110
YX-C33	Die-casted all	110
YX-C226	Die-casted all	93
YX-C232/ C233	Die-casted all	110
YX-C234	Die-casted all	100/110
YX-C227	Die-casted all	110
YX-C227B	Die-casted all	110
YX-C18A	Steel	105
YX-C18B	Steel	120
YX-C18C	Steel	115
YX-C18	Steel	110
YX-C29	Steel	100
YX-C35	Steel	110
YX-C19	Steel	102
YX-C36	Steel	110
YX-C05	Steel	102
YX-C18D	Steel	102/105/110/115/120
YX-C24	Resin with steel	110
YX-C26	Resin with steel	110
YX-C20	Resin with steel	110
YX-C208	Resin with steel	110
YX-C15	Resin with steel	110
YX-C15B	Resin with steel	102
YX-C16	Resin with steel	110
YX-C307	Resin with steel	110
YX-C06	Resin with steel	102
YX-C07	Resin with steel	110
YX-C07A	Resin with steel	120

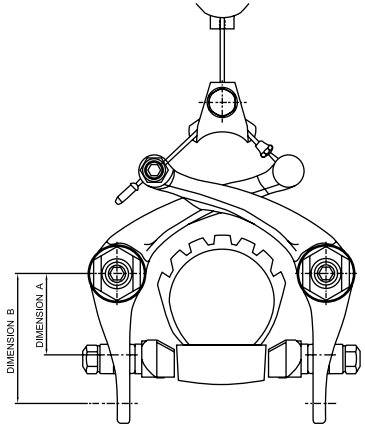

U-TYPE BRAKE

型号 Model	材质 Material
YX-C30	Alloy

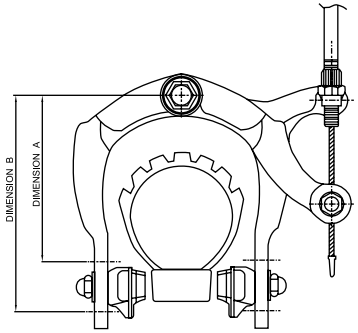

CALIPER BRAKE

型号 Model	材质 Material	高度 Higt(m/m)
YX-81	Steel	81 ± 12
YX-81B	Steel	81 ± 12
YX-68	Steel	68 ± 12
YX-79A	Alloy	79 ± 12
YX-81A	Alloy	81 ± 12
YX-82A	Alloy	81 ± 12
YX-2200A	Alloy	58 ± 12
YX-2300A	Alloy	53 ± 12

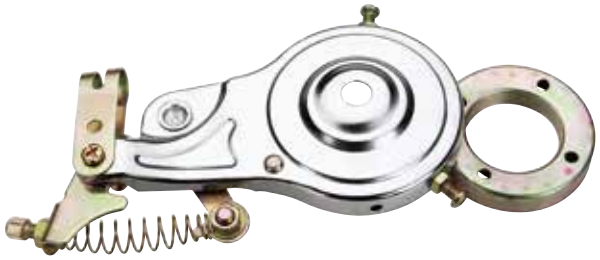

YX-60

Drum diam: ø60mm
Finish: ed black or cp.
Screw type: British or Metric
Packing: 100PCS/CTN
G.W./N.W.: 21/20kgs
Meas: 40 x 28 x 19 cm
规格: 刹鼓ø60mm
表面处理: 电泳漆，镀铬
螺纹: 英/公制
包装: 100只/箱
毛重: 21千克 净重: 20千克
材积: 40 x 28 x 19 cm

YX-80

Drum diam: ø80mm
Finish: ed black or cp.
Screw type: British or Metric
Packing: 50PCS/CTN
G.W./N.W.: 17/16kgs
Meas: 40 x 28 x 19 cm
规格: 刹鼓ø80mm
表面处理: 电泳漆，镀铬
螺纹: 英/公制
包装: 50只/箱
毛重: 17千克 净重: 16千克
材积: 40 x 28 x 19 cm

YX-70

Drum diam: ø70mm
Finish: ed black or cp.
Screw type: British or Metric
Packing: 50PCS/CTN
G.W./N.W.: 13/12kgs
Meas: 36 x 25 x 16 cm
规格: 刹鼓ø70mm
表面处理: 电泳漆，镀铬
螺纹: 英/公制
包装: 50只/箱
毛重: 13千克 净重: 12千克
材积: 36 x 25 x 16 cm

YX-90

Drum diam: ø90mm
Finish: ed black or cp.
Screw type: British or Metric
Packing: 50PCS/CTN
G.W./N.W.: 23/22kgs
Meas: 40 x 28 x 19 cm
规格: 刹鼓ø90mm
表面处理: 电泳漆，镀铬
螺纹: 英/公制
包装: 60只/箱
毛重: 23千克 净重: 22千克
材积: 40 x 28 x 19 cm

YX-M10

鼓刹
孔数 : 36
开档 : 110MM
轴长 : M10x150MM
Product : Drum Brake
Spoke Holes: 36
O.L.D: 110MM
Axle: M10x150MM

YX-N11

车铃
规格 : ø22.6MM
颜色 : CP/BK
Product: Rotating Bells
Size: ø22.6MM
Color: CP/BK

YX-N12

车铃
规格 : ø22.6MM
颜色 : BK
Product: Rotating Bells
Size: ø22.6MM
Color: BK

YXW-01
Alloy seat clamp
ø34.9
Color: silver red blue, purple black yellow

YXW-02
Alloy seat clamp
ø31.8
Color: silver red blue, purple black yellow

YXW-03
Alloy seat clamp
ø25.4, ø28.6
Color: silver red blue, purple black yellow

YXW-04
Alloy seat clamp
ø25.4, ø28.6
Color: silver red blue, purple black yellow

YXW-05
Alloy seat clamp
ø31.8, ø34.9
Color: silver red blue, purple black yellow

YXW-06
Alloy seat clamp
ø34.9
Color: silver red blue, purple black yellow

YXW-07
Alloy seat clamp
ø31.8
Color: silver red blue, purple black yellow

YCR-22
Alloy quick release
F: M5×146 151
R: M5×178 183
Color: silver red blue, purple black yellow

YCR-21
Alloy quick release
F: M5×146 151
R: M5×178 183
Color: silver red blue, purple black yellow

YCR-23
Alloy quick release
F: M5×146 151
R: M5×178 183
Color: silver red blue, purple black yellow

YCR-24
Alloy quick release
F: M5×146 151
R: M5×178 183
Color: silver red blue, purple black yellow

YCR-01
Alloy quick release
M6 M8×50 55 60 65
Color: silver red blue, purple black yellow

YCR-13
Alloy quick release
M6 M8×50 55 60 65
Color: silver red blue, purple black yellow

YCR-07
Alloy quick release
M6 M8×50 55 60 65
Color: silver red blue, purple black yellow

YCR-08
Alloy quick release
M6 M8×50 55 60 65
Color: silver red blue, purple black yellow

YCR-05
Alloy quick release
M6 M8×50 55 60 65
Color: silver red blue, purple black yellow

YCR-02
Alloy quick release
M6 M8×50 55 60 65
Color: silver red blue, purple black yellow

YCR-03
Alloy quick release
M6 M8×50 55 60 65
Color: silver red blue, purple black yellow

YCR-04
Alloy quick release
M6 M8×50 55 60 65
Color: silver red blue, purple black yellow

YCR-06
Alloy quick release
M6 M8×32 34 36 38 40 42 44
Color: silver red blue, purple black yellow

YCR-09
Alloy quick release
M6 M8×50 55 60 65
Color: silver red blue, purple black yellow

YCR-11
Alloy quick release
M6 M8×32 34 36 38 40 42 44
Color: silver red blue, purple black yellow

YCR-25
Alloy quick release
M6×50 55 60 65
Color: silver red blue, purple black yellow

F30 F07 F06 F05 F16 F09 F10

F01 F11 F12

F15

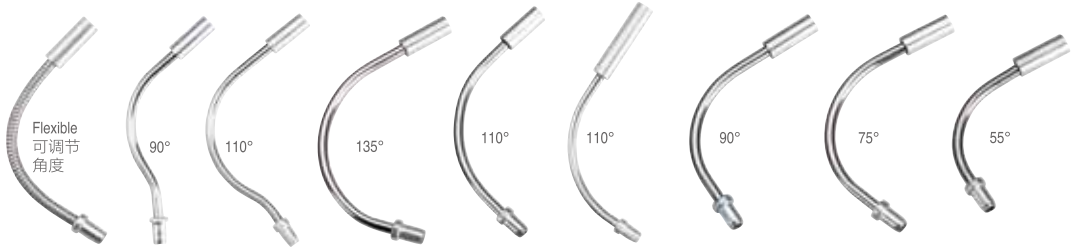

For Lady Bike
淑女车型

F04

F08-1

F08-2

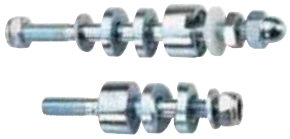

F22

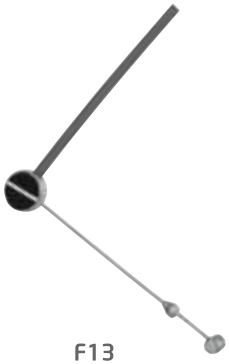

F13

F14

YCR-16
Rail quick release
铁快拆

Outer cable
线管

YBS-01

E15
50mm

E08
35mm
0° 8° 25°

E06
40mm
0° 8° 25°

E11
35mm, 40mm
0° 8° 25°

E14
35mm, 40mm
0° 8° 25°

E10
50mm,
55mm

E03
55mm

E13
60mm

E12
70mm

E16
55mm

E09
60mm

E17
70mm

E04
60mm

E05
70mm

E02
50mm, 55mm

E18
60mm

E07
70mm

E01
70mm

寧波豪星車業有限公司
Ningbo Haoxing Bicycles Industry Co., Ltd.

寧波豪億車業有限公司
Ningbo Haoyi Bicycles Co., Ltd.

慈溪市銀星車料廠
Cixi Yinxing Vehicle Accessories Factory

地址: 中國寧波慈溪市勝山工業區工業大道615號
Add: No. 615 Industrial Street Shengshan Industrial Zone,
Cixi City, Ningbo, China
Tel: (+86)574 63547313 63543518
Fax: (+86)574 63548586
Mobile phone: 13906745535
http: //www.haoyibike.com
E-mail: yinchibicycle@126.com asion@haoyibike.com

廣州辦事處 Guangzhou office
地址: 廣州番禺市大石鎮大山村富庭東園
Add: Futingdongyuan, Dashan Village, Dashi Town, Panyu
City, Guangzhou
Tel: 020-39939191 Fax: 020-84781984
Mobile phone: 13902209781

天津辦事處 Tianjin office
地址: 天津市北辰區青光鎮福廣路2號
Tel: 17526997638 Fax: 022-26960638
Mobile phone: 13819810099 15122676138

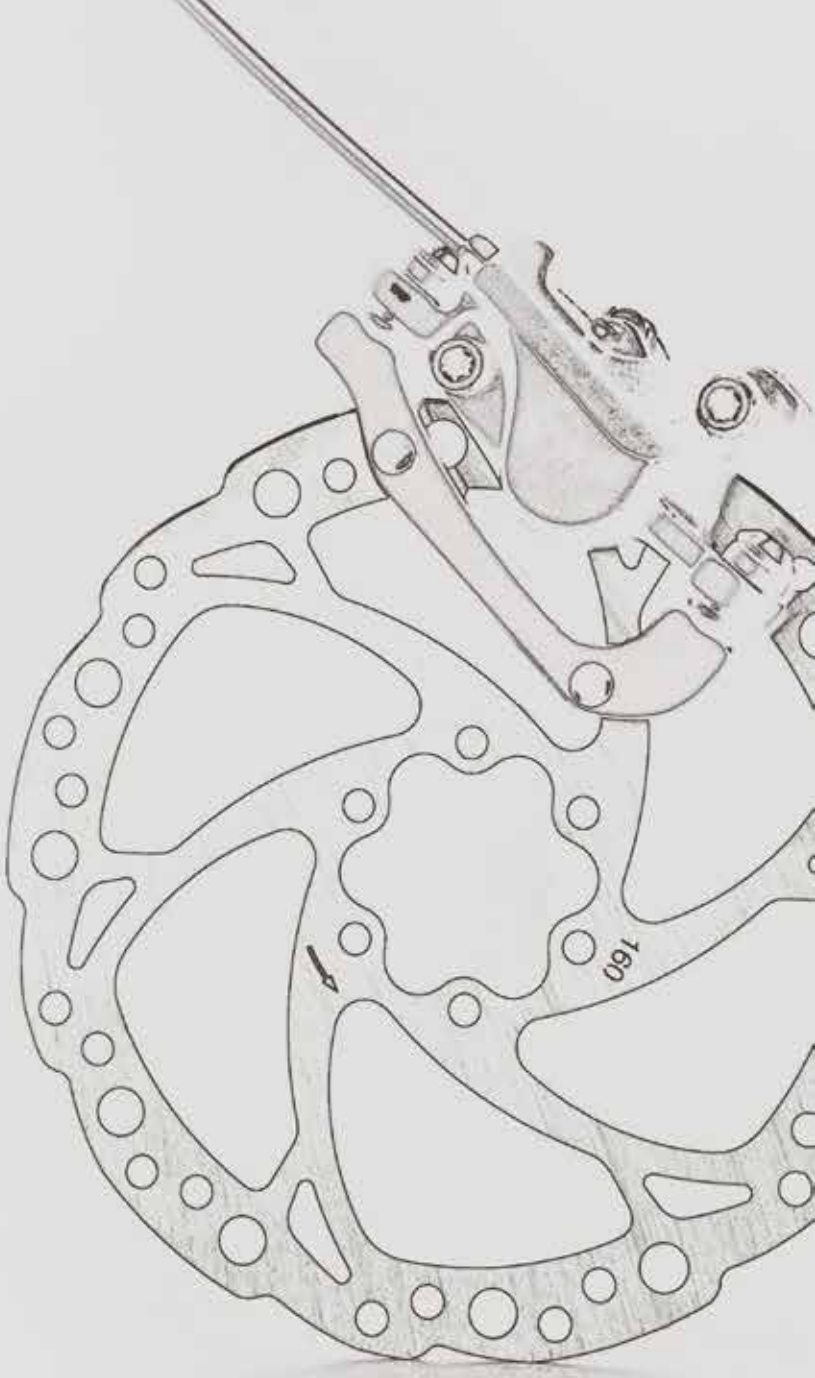

清和堂 Tel: 0574-63812204